Instructions for Use

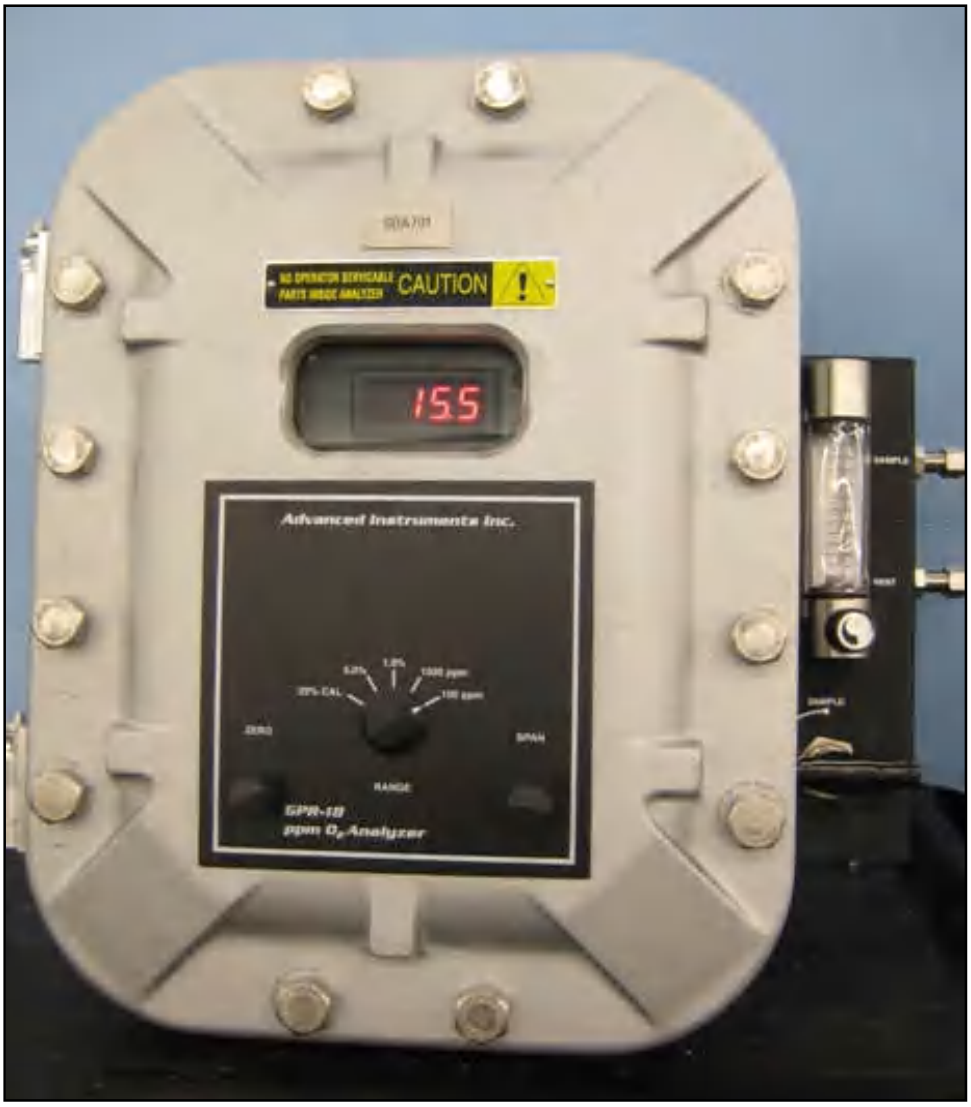

GPR-18MS / GPR-18 / GPR-28

Explosion Proof Oxygen Analyzers

ATEX / IECEx Certified

PROCESS SENSING
TECHNOLOGIES

Table of Contents

1. Introduction
Intended Use
Technical Description & Labeling
Theory of Operation

2. Essential Information
Symbols
Warnings, Cautions & Information

3. Installation
Unpacking & Inspect
Overview
Sensors Available
Operating Conditions
Sample Systems
Mounting
Electrical Connections
Gas Connections
Establishing Power
Installing the Oxygen Sensor

4. Calibration
Overview
Accuracy
Calibration Gas Preparations
Zero Calibration
Span Calibration
Sampling

5. Operation
Overview
Oxygen Display
Display Mode Selection
Oxygen Alarms: Description & Setup
Power Failure Alarm
Sensor Failure Alarm
Signal Outputs
Range ID Output
Temperature Controlled Heater
- (optional GPR-18 and GPR-28)
- Heater Runaway
Range Selection
Standby

6. Maintenance
Overview
Sensor Replacement
Analyzer Enclosure

7. Spare Parts

8. Trouble Shooting

9. Warranty

10. Safety Data Sheet
GPR Series Oxygen Sensors
XLT Series Oxygen Sensors

11. Specifications

12. Quality Control & Calibration Certification

A. Appendix
Recommendations Cable Gland & Conduit Sealing

B. Declaration of Conformity

1. Introduction

Your new oxygen analyzer is a precision device designed to give you years of measuring a wide range of oxygen concentrations. This analyzer features sensor technology developed exclusively by Analytical Industries Inc.

For a discussion of the various analyzer's performance see section 11 Specifications of this Instructions for Use.

The analyzers are designed to measure the oxygen concentration in inert gases, gaseous hydrocarbons, hydrogen and a variety of gas mixtures. To obtain maximum performance from your new oxygen analyzer, please read and follow the guidelines provided in this Instructions for Use.

Every effort has been made to select the most reliable state of the art materials and components; and, to design the analyzer for superior performance and minimal cost of ownership. This analyzer was tested thoroughly by the manufacturer prior to shipment for best performance.

However, these devices do require service from time to time. The warranty included herein plus a staff of trained professional technicians to quickly service your analyzer is your assurance that we stand behind every analyzer sold.

The serial number of this analyzer may be found on the side the analyzer. You should note the serial number in the space provided and retains this Owner's Manual as a permanent record of your purchase, for future reference and for warranty considerations.

Serial Number: _____

Analytical Industries Inc. appreciates your business and pledges to make every effort to maintain the highest possible quality standards with respect to product design, manufacturing and service.

Intended Use

The Explosion Proof Series of Oxygen Analyzers are designed with an explosion proof enclosure, flame arrestors, breather device, actuators and certified for use in hazardous areas as noted at the right.

GPR-18MS: 10 PPB to 1000 PPM oxygen contamination in inert, hydrocarbon, He, H2 and mixed gases streams.

GPR-18: 50 PPB to 1% oxygen contamination in inert, hydrocarbon, He, H_2, mixed, and acid (CO_2) gas streams.

GPR-28: 0.05% to 100% oxygen measurements in inert, hydrocarbon, He, H_2, mixed and acid (CO_2) gas streams.

The analyzers share a common configuration, the differences separating the analyzers involves only the sensor as dictated by the level of oxygen analysis.

Technical Description

Oxygen Analyzer

Manufacturer: Analytical Industries Inc.

Types: GPR-18MS, GPR-18, GPR-28

ATEX: Certificate: INERIS 07ATEX0025X

Standards: EN IEC 60079-0:2018
EN 60079-1:2014

Marking: Ex II 2 G
Ex db IIB or IIB+H2 T6 Gb

IECEx: Certificate: IECEx INE 19.0054X

Standards: IEC 60079-0:2017
IEC 60079-1:2014

Marking: Ex db IIB or IIB+H2 T6 Gb

Tamb = -20°C to +60°C

Flameproof Enclosure

Manufacturer: Killark

Type: EXB N34 cover, window and three buttons
EXB N34 box, 3 holes ½"NPT, 2 holes ¾"NPT

ATEX: Certificate: PTB 07ATEX1025U

Standards: EN 60079-0:2006
EN 60079-1:2004
EN 61241-0:2006
EN 61241-1:2004

Marking: Ex II 2 G
Ex d IIB+H2 T6

IECEx: Certificate: IECEx QPS 17.0013U

Standards: IEC 60079-0:2017 Edition: 7.0
IEC 60079-1:2014-06 Edition: 7.0
IEC 60079-31:2013 Edition: 2

Marking: Ex db IIB+H2 T6 Gb

Tamb = -20°C to +60°C

Volume : 13L

Maximum power dissipated: 93W

1. Introduction

Flameproof Controller

Manufacturer: Killark

Type: EXB N34

ATEX: Certificate: PTB 07ATEX1024

Standards: EN 60079-0:2006
EN 60079-1:2004
EN 61241-0:2006
EN 61241-1:2004

Marking: Ex II 2 G
Ex db IIB+H2 T6 or T5 Gb

IECEx: Certificate: IECEx QPS 17.0014X

Standards: IEC 60079-0:2017 Edition: 7.0
IEC 60079-1:2014-06 Edition: 7.0
IEC 60079-31:2013 Edition: 2

Marking: Ex db IIB+H2 T6 Gb

Tamb = -20°C to +60°C

Flame Arrestors and Breather

Manufacturer: Michell Instruments

Type: FA-2-A Flame Arrestors and BR-2-A Breathers

ATEX: Certificate: SIRA16ATEX1366U

Standard: EN 60079-0:2012/A11:2013
EN 60079-1:2014
EN 60079-31:2014

Marking: Ex II 2 G D
Ex db IIB+H2 T6 Gb

IECEx: Certificate: IECEx SIR 16.0117U

Standards: IEC 60079-0:2011 Edition: 6.0
IEC 60079-1:2014-06 Edition: 7.0
IEC 60079-31:2013 Edition 2

Marking: Ex db IIB+H2 T6 Gb

Tamb: -40°C to +60°C

Limitations: Tsmax = 69,8°C
Volume max 55L
Pr = 40 bar

Containment system with limited release (presence of fittings)

Description: The sample gas is completely confined inside 1/8" stainless steel tubing with Swagelock type ferrule and ring compression fittings, taped and tightened to Swagelock's instructions, until exiting the enclosure.

Inlet pressure: specified regulated to 5-30 psig.

Flowrate: sample gas entering the enclosure: 1-2 SCFH

Test realized according to annex G of EN/IEC 60079-1:2014 for certification.

Cable gland

Analytical Industries does not supply the cable gland. It is the responsibility of the user to install a cable gland that complies with local regulations.

A unique label reflecting the sample above is permanently affixed to the enclosure to identify every analyzer.

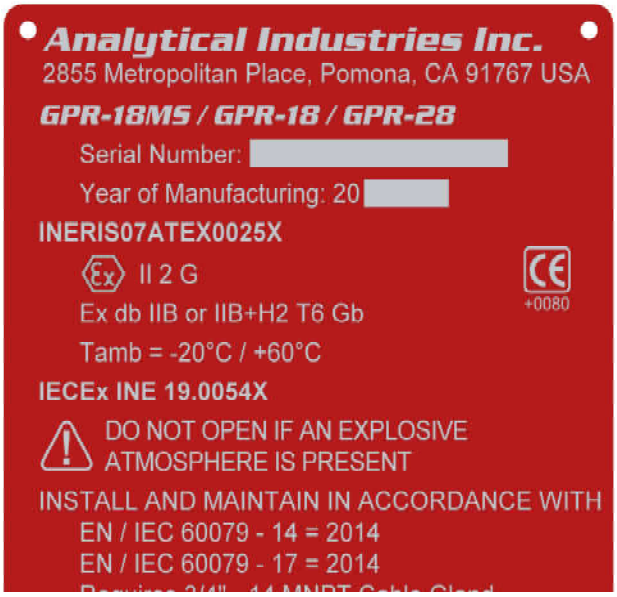

The analyzer must be installed in accordance with:

EN 60079-14 = 2014; IEC 60079-14=2013
EN 60079-17 = 2014; IEC 60079-17=2013

1. Introduction

Theory of Operation

These analyzers consist of two PCB assemblies, sample system including sample flow control valve and flow meter, sensor housing, and, incorporate a variety of advanced electrochemical galvanic fuel cell type sensors for PPB, PPM and % range oxygen measurements.

An optional temperature controlled heater system is available that enhances the stability of the oxygen reading and is recommended for outdoor installations or when temperatures vary regularly.

In standard configuration the alarm controls are integral to the main PCB and cannot accessed from the outside of analyzer (to prevent tampering with alarm set points), however, as an option, the alarm controls can be accessed externally when fitted with approved actuators.

Sensor Technology
As described in preceding Intended Use section, the analyzers share a common configuration owing to the requirements of their certification as explosion proof equipment. The differences that separate the analyzers involves only the sensor as dictated by the level of oxygen analysis.
Oxygen enters the sensor, simultaneously oxidizes the anode and reduces the cathode to produce a linear electrical current signal output proportional to the oxygen concentration in the gas phase.

Advanced sensor technology permeates the range of oxygen sensors which are:

- specific to oxygen with superior accuracy
- generate a signal output that is both linear over all ranges and virtually constant over its life time
- exhibits superior stability and fast response time
- requires no maintenance or electrolyte additions
- easily replaced in the field like a battery
- offer the best warranty and service in the industry

GPR-18MS: Measures 10 PPB to 1000 PPM oxygen contamination in inert, hydrocarbon, He, H2 and mixed gases streams. It is based on a proprietary design, the Pico-Ion™ oxygen sensor which is specific to oxygen and produces a current signal output 80x greater than conventional electrochemical fuel cells and equal to Coulometric wet cells.

The Pico-Ion sensor features a proprietary sensing electrode that generates the 80x increase in signal output and a unique gas delivery path that minimizes the amount of unreacted oxygen that can dissolve into the electrolyte and slow offline recovery time.

Sensitivity, stability and recovery time are improved while significantly reducing the temperature dependence of the sensor's signal output which contributes to excellent long term stability.

GPR-18: Measures 50 PPB to 1% oxygen contamination in inert, hydrocarbon, He, H_2, mixed, and acid (CO_2) gas streams. Proprietary advancements in design and chemistry add significant advantages to an extremely versatile oxygen sensing technology.

These PPM oxygen sensors exhibit superior accuracy and stability, recover from exposure to air to PPM levels in minutes with a longer life and warranty period. The XLT version offers an extended operating range of -20°C to 50°C and excellent compatibility for measuring PPM oxygen levels in applications involving natural gas and beverage grade CO2 containing up to 100% CO_2.

GPR-28: 0.05% to 100% oxygen measurements in inert, hydrocarbon, He, H_2, mixed and acid (CO_2) gas streams. Proprietary advancements aid in the transition from PPM to low percentage range measurements all the way to 100% pure oxygen.

In addition to superior accuracy and stability, the percent oxygen sensor offer the longest life and extended temperature range in the industry. The XLT version also offer an extended operating range of -20°C to 50°C and excellent compatibility for measuring oxygen levels in applications containing varying concentrations of CO_2.

Signal Processing Electronics
The signal generated by the sensor is processed by an integrated electronic circuit. The first stage amplifies the signal. The second stage eliminates the low frequency noise. The third stage employs a high frequency filter and compensates for signal output variations caused by ambient temperature changes.

The result is a very stable signal. Sample oxygen is analyzed very accurately. Response time of 90% of full scale is less than 30 seconds (actual experience may vary due to the integrity of sample line connections, dead volume and flow rate selected) on all ranges under ambient monitoring conditions. Sensitivity is typically 0.5% of full scale low range. Oxygen readings may be recorded by an external device via an isolated 4-20mA and 0-1V signal output.

Overall performance is enhanced by an optional temperature controlled heater system that controls the temperature around the sensor at a pre-set temperature.

Power to the analyzers is supplied by an integral universal 110/230 VAC power supply. Connections of the appropriate AC line voltage are hard wired to screw type terminal blocks. Power requirement related to the optional heater system is specific to 100/110VAC or 220/230VAC, supply power as indicated near the power input terminal.

2. Essential Information

This section summarizes the general precautions and operating information for the Explosion Proof Series Oxygen Analyzers that must be observed to prevent damage to the analyzer and injury to the operator.

The remaining sections provide specific additional instructions for optimizing the analyzer's performance in inert sample gases. Analytical Industries Inc. will not be responsible for damages resulting from the installation or operation of the analyzer in a manner not consistent with these Instructions for Use.

	Review Instructions for Use.
	Alerts the user to important information.
	Danger: Hazardous conditions to personnel.
	Caution: Possible damage to equipment.
	Caution: Caustic liquid present (section 10).
	Caution: High voltage hazard present.
	DO NOT attempt this action.

DO NOT use a sample pump downstream of the GPR-18MS. This analyzer employs a fixed restrictor as opposed to the adjustable metering valve found in the GPR-18 and GPR-28. Attempting to pull the sample with the restrictor in place will draw a vacuum and permanently damage the oxygen sensor in the GPR-18MS.

For applications with samples at ambient or negative pressure, positioning a sample pump upstream of any of the analyzers requires sourcing and empirically confirming the pump's leak rate (inevitable) is within the acceptable accuracy range of the measurement.

	Read the Instructions for Use before operating the analyzer and retain for future reference.
	The sensor contains caustic liquid, DO NOT open.

	Avoid erratic or erroneous O2 readings by: ▶ Calibrate at the sample gas temperature and pressure. ▶ Set flow rate at lowest pressure expected (section 11). ▶ Mounting the analyzer indoors under stable conditions as near to 25°C and 1 atm as possible. ▶ A pump upstream of the sensor should be be tested for air leaks before finalizing the sample system. ▶ Preventing excessive power line voltage variations. ▶ Bundling the signal output wires with power cable. ▶ Confirm span gas O2 value with air calibrated portable.
	Avoid damaging the O2 sensor or analyzer components by: ▶ Opening the sensor's shipping package before instructed. ▶ The sudden removal of a restriction in the vent line draws a vacuum on the sensor damaging the sensing area and causing electrolyte leakage which in turn damages the electrical contacts and clogs the gas line. ▶ Exceeding the specified inlet pressure or venting to a line above atmospheric pressure (section 11). ▶ Disconnecting power to the analyzer for over 24 hours without flowing zero gas. ▶ Operating outside the temperature range (section 11). ▶ Sample pump downstream of the sensor requires the manual flow control valve upstream of the sensor to be wide open to avoid drawing a vacuum on the sensor as noted above.
	▶ Hazardous AC voltage is present within the analyzer. ▶ Supply power as specified by markings on analyzer. ▶ Contact factory for cleaning and service instructions.

Troubleshooting: Consult the guidelines in section 8 for advice on the common operating errors before concluding that your analyzer is faulty. Do not attempt to service the analyzer beyond those means described in the Instructions for Use.

Serviceability: See section 6 Maintenance. While none of the components are serviceable in themselves, see Section 7 Spare Parts is provided in the unlikely event a component fails and has to be replaced.

Please review section 9 Warranty, DO NOT attempt to service the analyzer or replace component parts on your own, consult the factory or a factory trained service technician.

3. Installation

Unpack & Inspect

1. Examine the condition of the packaging, remove the contents identified below and inspect.
   - Oxygen Analyzer
   - Instructions for Use (e-copy on thumb drive)
   - Quality Control & Calibration Certification (sec 12)
   - Chart Recording of Qualification Test
2. Verify the contents against the packing slip.
3. Open the analyzer door, remove any shipping materials and inspect with particular attention to components that may have come loose during transport.
4. Report any apparent damage or missing items to the carrier and factory immediately (909-392-6900 or info@aii1.com). DO NOT proceed if damage is noted.

Overview

The following sections provide key information about the sensors, influence of operating conditions, sample system requirements, mounting the analyzer, electrical connections, gas connections, establishing power to the analyzer and installing the oxygen sensor.

Install in accordance with ATEX Directives and IECEx Scheme:

EN 60079-14:2014; IECEx 60079-14:2013
EN 60079-17:2014; IECEx 60079-17:2013

Sensors

The GPR series sensor is available with all analyzers and recommended for all inert and hydrocarbon gas streams, whereas, the XLT series sensor is available only with the GPR-18 and GPR-28 analyzers and is recommended for background gases with more than 0.5% CO_2 on a continual basis.

Avoid prolonged exposure to air or high O2 levels.

GPR-12-2000 MS PPB oxygen sensors are susceptible to damage from prolonged exposure to > 1000 PPM O2.

GPR-12-333 PPM sensors last 4-6 months in prolonged exposure to air but generate a > 1-2 PPM O2 offset in the reading on zero gas. **XLT-12-333 PPM** sensors expire after 5-7 days in air.

GPR-11-32 and **XLT-11-24** % sensors are not adversely affected by exposure to ambient air.

See section 11 Specifications for the expected life of an oxygen sensor which is inversely proportional to changes in the oxygen concentration and pressure and exponential (2.54%/°C) to sample temperature, e.g. if an analyzer is continuously operated at 35°C, expect the sensor life to be reduced by ~30%.

Operating Conditions

Temperature of the sample gas must be within the recommended operating range specified in section 11 before it enters the analyzer.

Hot sample gases can easily be cooled to ambient temperature by using a coiled 10 foot length of ¼" stainless steel tubing. On an intermittent basis, the analyzer may be operated at 50 degree C.

Sample Inlet Pressure
The analyzers are designed for flowing samples under positive pressure, see section 11 Specifications.

If the analyzer is equipped with an optional H2S scrubber and or a coalescing filter, inlet sample pressure must not exceed 30 PSIG.

For sampling gases at near atmospheric pressure or under slight vacuum an external sample pump can be used to either push or draw the sample gas from the process, move it through the analyzer for analysis and to vent.

The positioning of the sample pump either upstream or downstream of the analyzer requires making an informed decision:

1. The rate at which air (oxygen) leaks into the pump should be empirically determined.
2. The user's accuracy requirements must be assessed in light of the actual leak rate of the sample pump.
3. If the sample pump has a low enough leak rate to meet the user's accuracy requirements (a) position the pump upstream of the analyzer to draw the sample and push it through the analyzer, (b) the analyzer's flow control device upstream of the sensor regulates the flowrate of the sample, a point that is critical to the GPR-18MS, (c) the possibility of damaging the oxygen sensor is minimized, (d) this approach is the exception rather than the rule.
4. To meet the user's accuracy requirements or inability to confirm the actual leak rate of the sample pump position the pump downstream of the analyzer as the safest approach to obtaining reliable measurements.

GPR-18MS uses a fixed restrictor to control the flowrate which renders this analyzer unsuitable for use with a pump downstream of the analyzer.

GPR-18 and GPR-28 use an adjustable valve to control the flow rate. When a pump is positioned downstream of the analyzer, the adjustable valve MUST BE COMPLETELY OPEN to avoid drawing a vacuum directly on and permanently damaging the oxygen sensor.

3. Installation

Sample Vent Pressure
In positive sample pressure applications, the sample must be vented to ambient or in a vent line with pressure less than the sample inlet pressure.

If the sample is vented to a line at a pressure above or below ambient, a back-pressure regulator must be installed downstream of the oxygen sensor and set at least 1 PSIG higher that the line pressure of the vent to ensure a constant pressure on the sensor.

When employing a back-pressure regulator to overcome a higher vent line pressure, e.g. venting a sample to a flare line, (a) set the back-pressure gradually to avoid drawing a vacuum on the sensor and (b) calibrate the analyzer after the back-pressure regulator has been set.

Sample System

Sample Gas Stream: Ensure that the sample gas composition and application conditions are consistent with the specifications of the analyzer. If in doubt, consult factory to ensure the analyzer is suitable for specific gas analysis.

Material and Components
The analyzers are equipped with necessary sample handling components. However, if the analyzer was purchased without a sample handling system, the user may be required to install the necessary sample handling components.

When designing a sample system, use of stainless steel tubing, fittings and valves is essential for maintaining the integrity of the sample gas stream.

Removal of Contaminant Gases: In certain application, it may be necessary to remove any contaminants that may interfere with measurements. Typically, a gas-specific scrubber is used to remove interfering gases such as oxides of sulfur and nitrogen or hydrogen sulfide.

The presence of such interfering gases can result in false oxygen readings and reduction in the expected life of the sensor. Consult factory for recommendations concerning the proper selection and installation of scrubber or filter components.

Mounting

The analyzers are packaged in an aluminum wall mount enclosure with dimensions of 13.25” x 17.25” x 10.75” which carries ATEX / IECEx certifications and IP66 rating.

Only authorized trained personnel should install this analyzer. Installation must comply with local, state, country regulations and the ATEX standards identified above.

DO NOT connect electrical power until the analyzer is properly mounted.

The analyzer is designed for mounting on a flat vertical surface (mount approximately 5 feet above the floor) by bolting the mounting feet attached to the rear of the enclosure the mounting surface using 1/2" or M12 diameter steel bolt and washers

Inspect and clean the machined surfaces of both the bottom base and the hinged cover of the enclosure. The sealing surfaces must be inspected and free of nicks, dirt or any foreign particle build-up that would prevent a proper seal.

Closing the enclosure:
1. Wipe the sealing surfaces with a clean lint-free cloth.
2. Apply a light coating of Killark "LUBG" lubricant to the sealing surfaces.
3. Close the hinged cover and mate to bottom base.
4. Install the bolts thru the cover into bottom base,
5. Finger tighten,
6. Torque the bolts to 30 ft/lbs.

After installation, the unit must be inspected regularly to verify the enclosure mounting bolts are tight and in good condition, the cover bolts are torqued to 30 ft/lbs., conduit/cable gland connections are intact and free of corrosion.

Should the flange surface be damaged, NEVER attempt to rework the surface of flange in the field. Consult the analyzer or enclosure manufacturer identified by one of the red metal labels affixed to the enclosure.

See enclosure diagram on following page.

3. Installation

Mounting - Enclosure Diagram

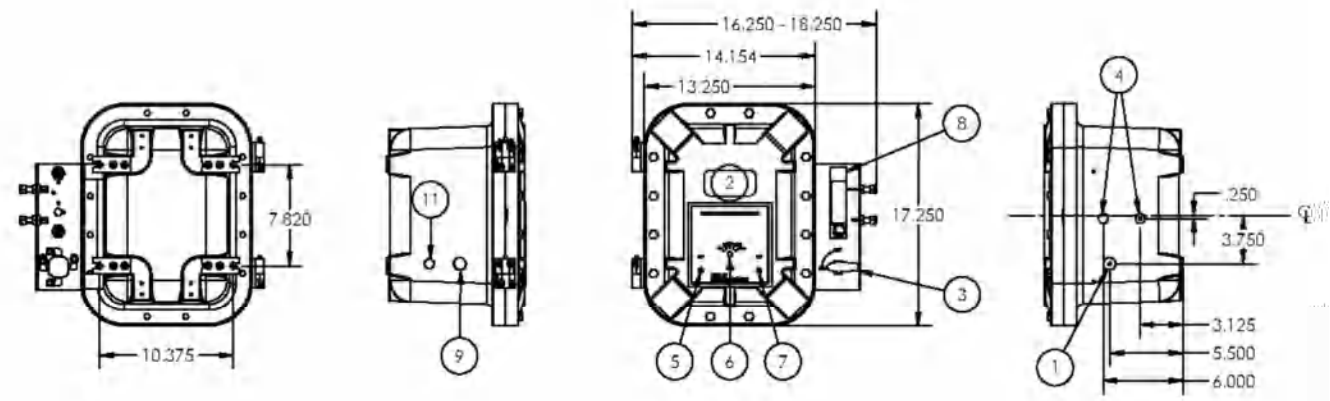

REF	DESCRIPTION	PART NO.
1	3/4" NPT-F POWER INPUT	-
2	LCD DISPLAY 3.5 DIGITS; MODE & ALARM LED'S	MTR-1002
3	BYPASS VALVE	VALV-1031
4	FLAME ARRESTORS	FITN-1262
5	ACTUATOR CONTROL ZERO POTENTIOMETER	A-3152
6	ACTUATOR CONTROL RANGE SWITCHING	A-2610 (GPR-18) A-2745 (GPR-18MS) A-2774 (GPR-28)
7	ACTUATOR CONTROL SPAN POTENTIOMETER	A-3152
8	FLOW INDICATOR WITH VALVE	FMTR-1002
9	3/4" NPT-F OUTPUT & ALARMS INPUT	-
10	ENCLOSURE ALUM. EX-PROOF (ATEX)	ENCL-1012
11	BREATHER DEVICE	ENCL-1146
12	ENCLOSURE ALUM. EX-PROOF (ATEX) WITH OPTIONAL ACTUATOR CONTROLS - ALARM 1, ALARM 2 DRILL AND TAP 3/4"-14 NPSM THRU, SPOT FACE 2" DIAMETER (INSIDE COVER). MIN. SPOT FACE DEPTH - 360° CLEAN-UP. MIN. COVER THICKNESS REMAINING - 27/32", 2 PLACES	ENCL-1012-1

OPTIONAL

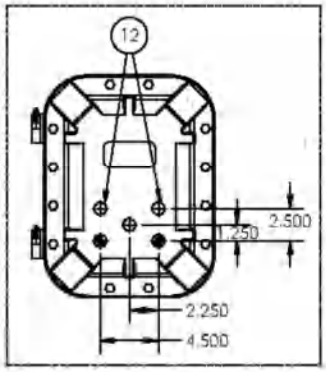

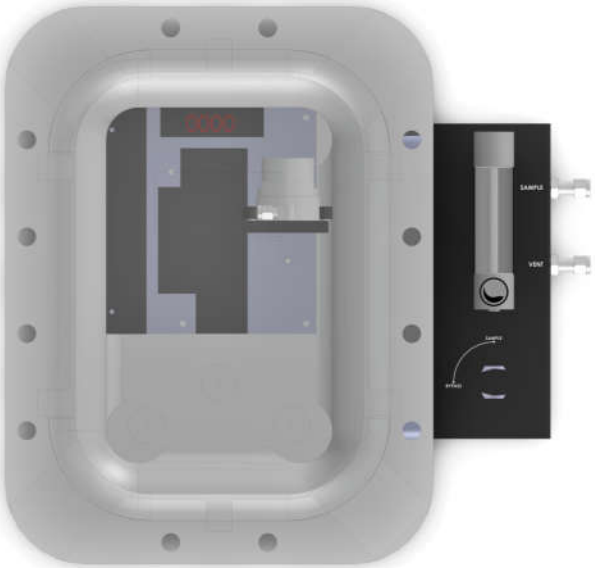

3. Installation

Mounting - Enclosure Diagram

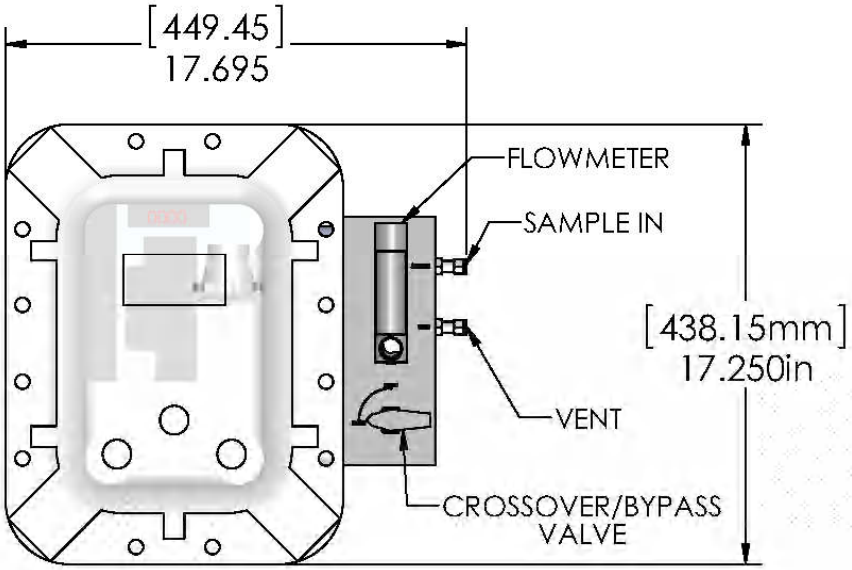

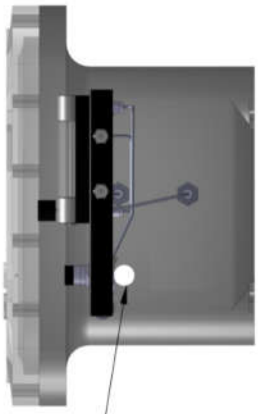

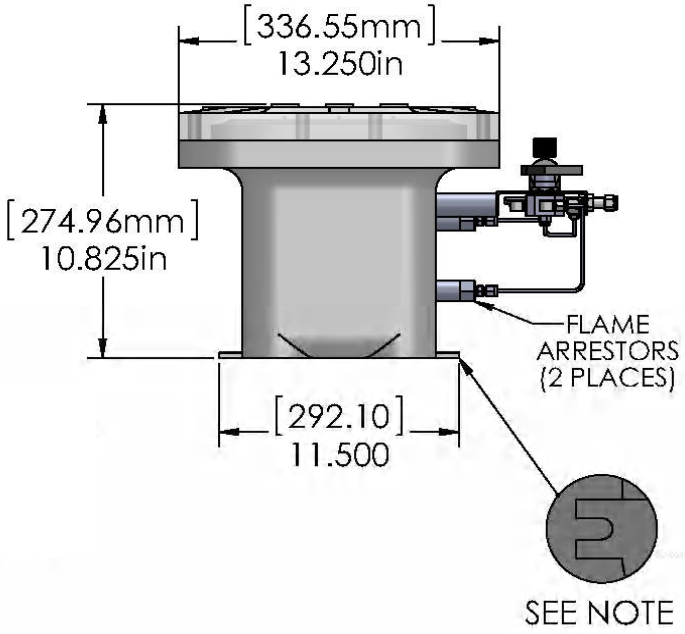

3. Installation

Electrical Connections

The analyzer electronics including the optional integral heater system are powered by a universal AC power supply that operates on 110 or 220 VAC power which must be specified at order entry. The analyzer's power rating is located near the power input terminal.

Install cable glands, size 3/4"-14 NPT-M, or conduit using an approved electrical conducting type lubricant on the threads. The glands and conduit must be either a tapered type thread conforming to ANSI/ASME B1.20.1 standard or an ISO metric thread standard.

Supply power to the analyzer only as rated by the specification and markings on the analyzer enclosure.

The accessories used for cable gland entry, size 3/4"-14 NPT-M, must be covered by a separate ATEX certificate and must be suitable to be used with the enclosure, see **Appendix A**.

Ensure that the analyzer is properly grounded, see illustration below, and meets the requirements of recommended local electrical standards.

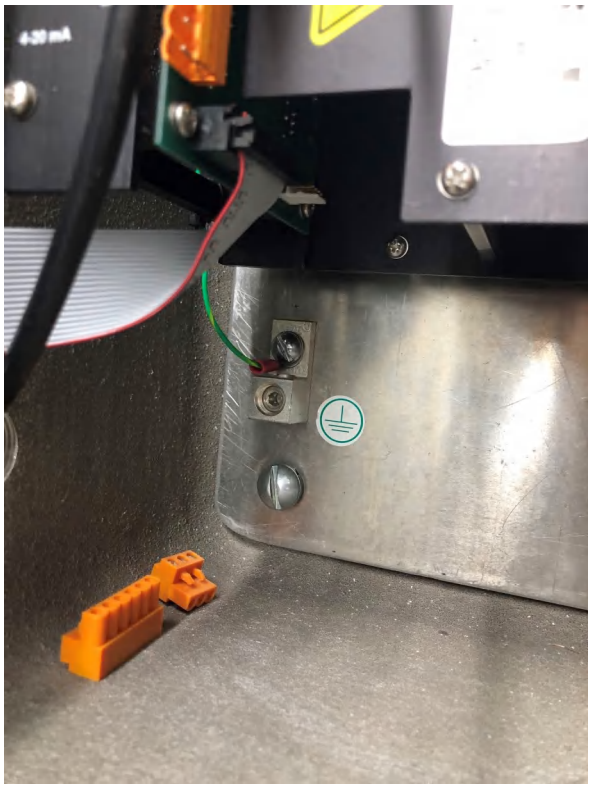

Power Consumption: The analyzer consumes a maximum 30 watts of power without the optional heater and 93 watts with the built-in optional heater system.

Power must be supplied through a separate conduit on the left side of the enclosure, see drawing previous page.

Use a shielded power cord with minimum of 18 gauge wires. If equipped with the optional integral heater system, the required internal wiring to the heater and controller has been installed at the factory.

The user simply connects an appropriate source of AC power to the power terminal as illustrated below. Bring the output and alarm connections through an approved 3/4"-14 NPT-M conduit fitting on the right side of the enclosure, see drawing previous page.

The electronics are rated for 110 or 220 VAC. Supply appropriate AC power of the power. An improper voltage could permanently damage the heating system. Do not remove the protective Plexi-glass panel that covers the PCB. The cover prevents the user from touching any of the LIVE circuitry on the PCB.

If authorized by the factory to replacement failed components in the analyzer, disconnect the AC power source to avoid electric shock. There is no AC power present on the circuit board assemblies mounted on inside of analyzer door.

See power and electrical feature connections, interconnection wiring and optional heater wiring diagrams along with installation procedures on the following pages.

3. Installation

Electrical Connections

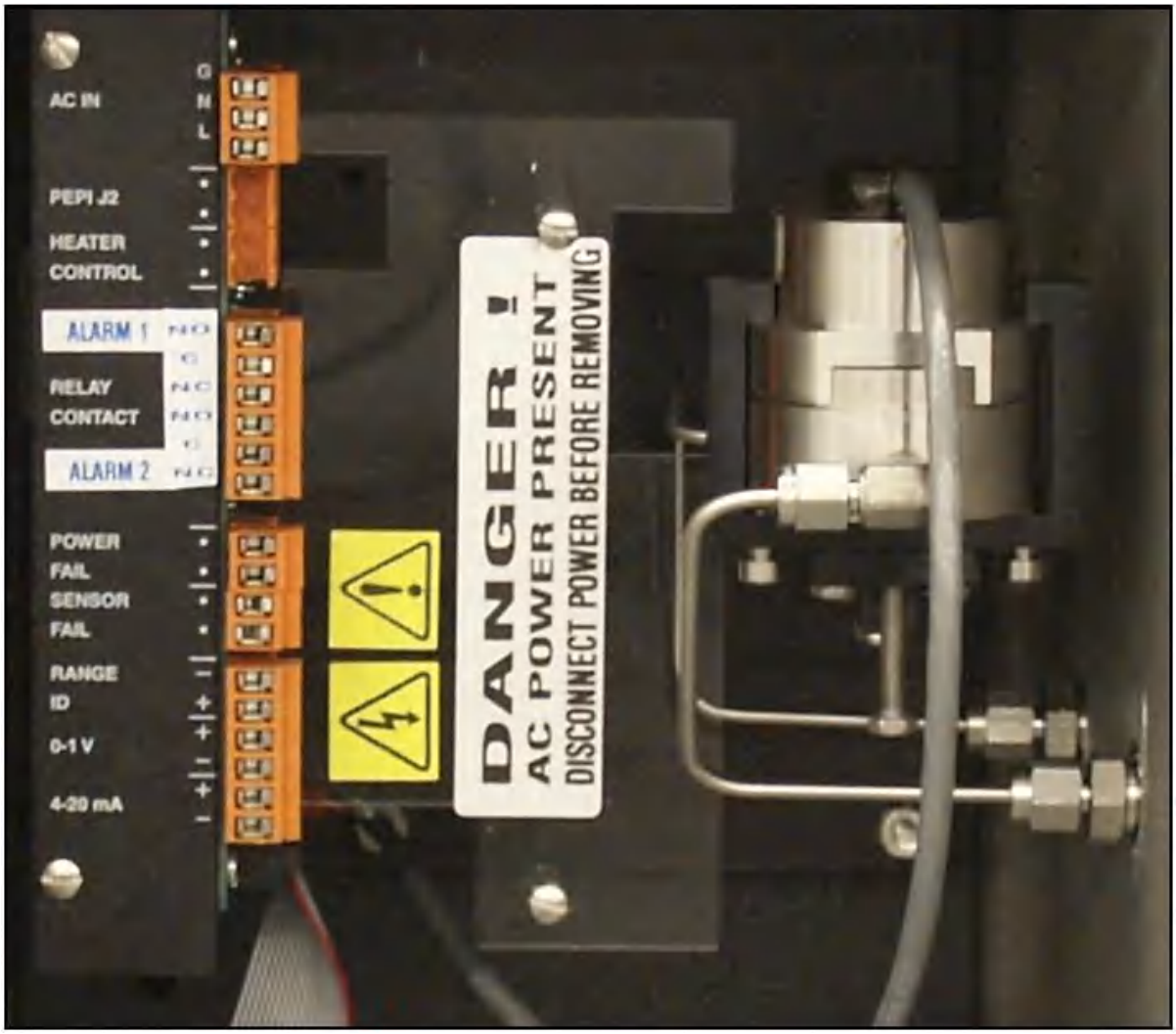

Procedure:

1. Insert the power cable through the user supplied ATEX approved conduit fitting on the left side of the analyzer.
2. Insert the signal output cable(s) through the user supplied ATEX approved conduit fittings on the right side of the analyzer.
3. Strip the ends of the wires approximately ¼ inch.
4. Loosen the terminal screws, insert the bare wire into the appropriate terminals and re-tighten with a small bladed screwdriver.
5. **Note:** If equipped with the optional temperature-controlled heater system, the necessary wiring to the heater and controller has been installed at the factory and no additional connections are required. The power connection services both the analyzer electronics and temperature-controlled heater system.
6. Connect the power ground directly to the ground terminal on the inside of the analyzer case, see previous page.
7. Pack and seal the seal fittings bringing power to and taking analog outputs and alarm interconnection wiring from the analyzer as recommended in Appendix A.
8. Establish power to the analyzer after making gas connections as below once installation is complete.

3. Installation

Electrical Connections - Analyzer Interconnection Diagram

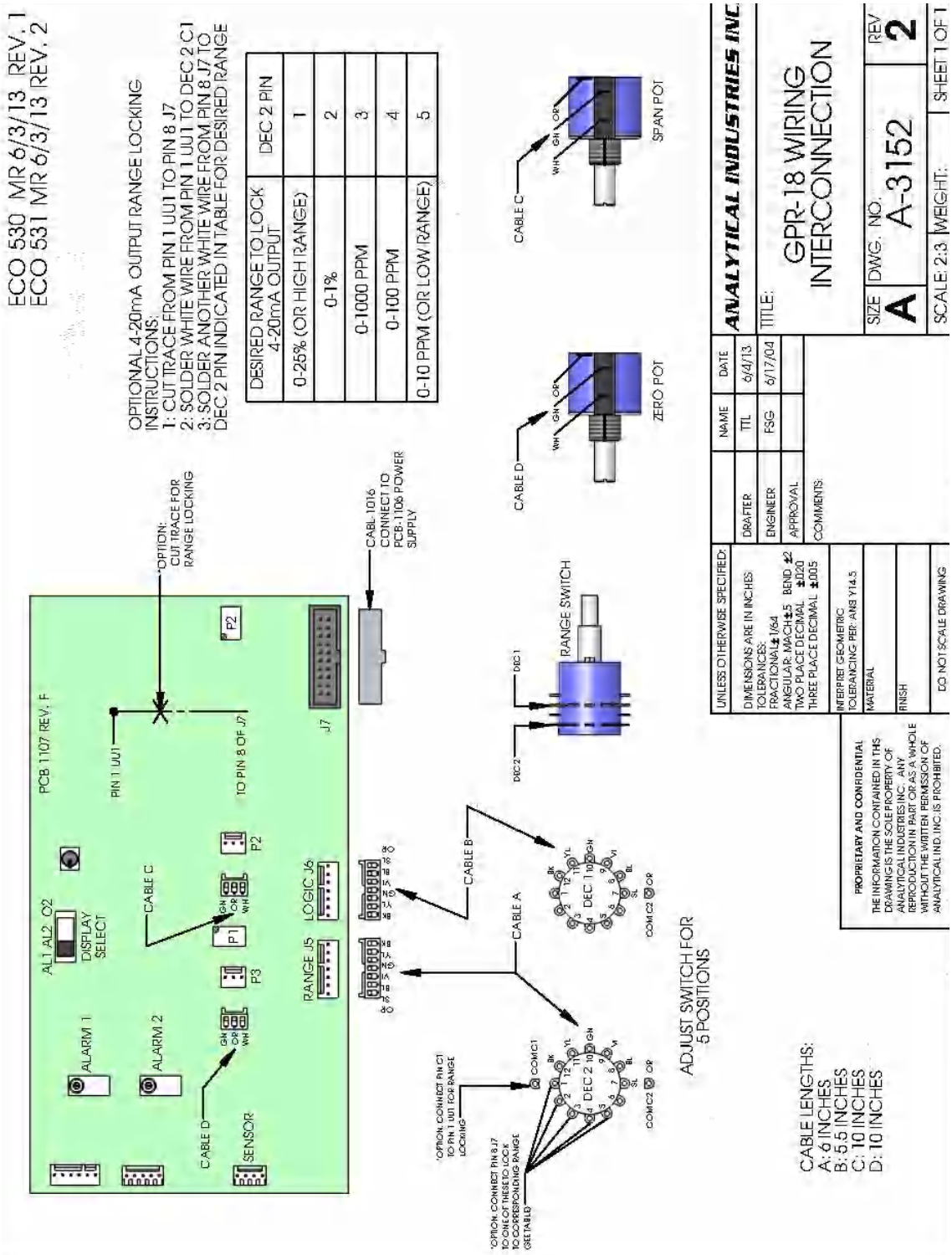

PROCESS SENSING TECHNOLOGIES

3. Installation

Electrical Connections - Optional Heater Wiring Diagram

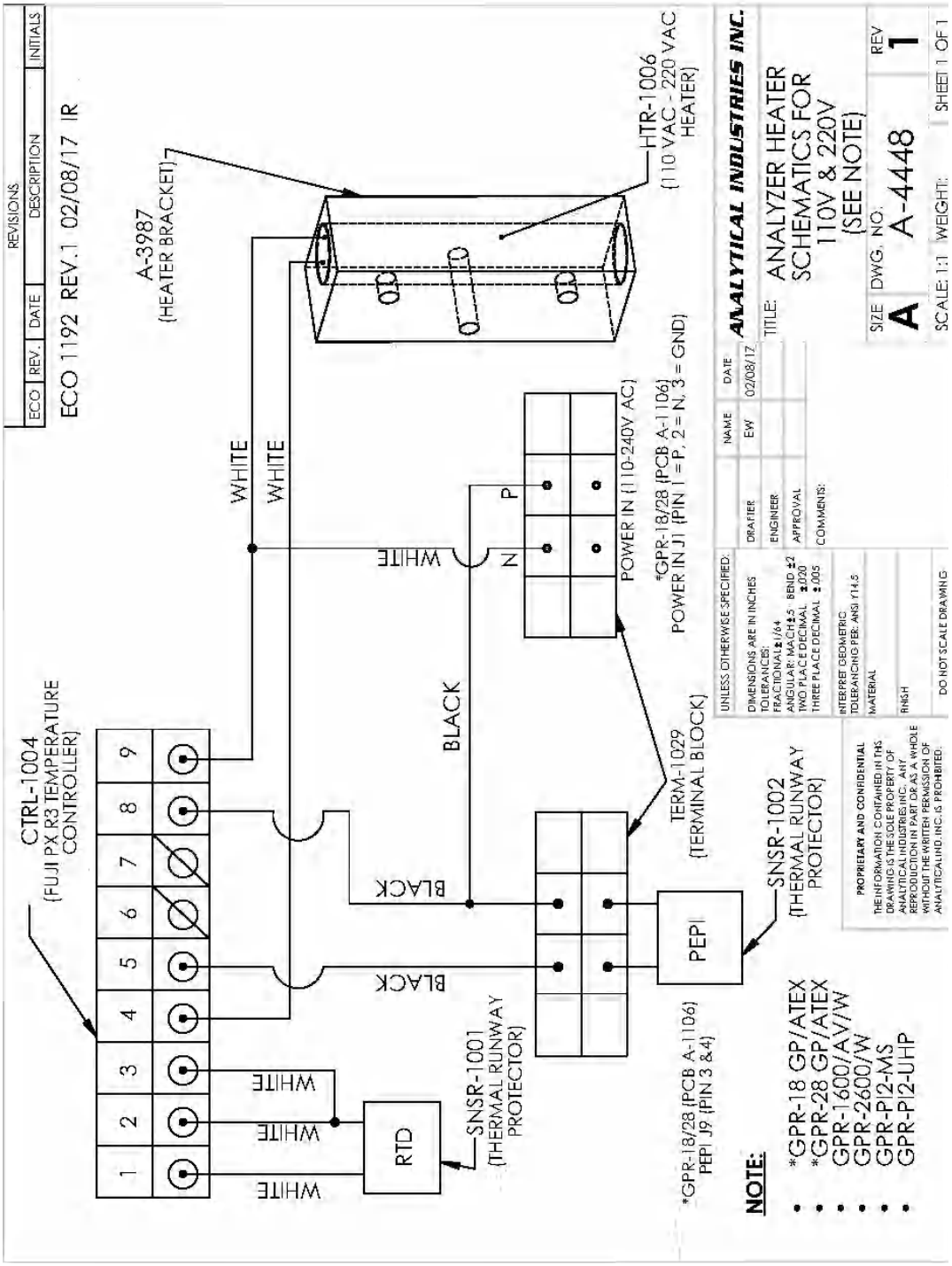

PROCESS SENSING TECHNOLOGIES

3. Installation

Gas Connections

The analyzer's flow through configuration is designed for positive pressure samples and requires connection to 1/4'" diameter compression tube fittings. Addressing different sample conditions was discussed previously.

Complementing the performance capabilities of the PPB (GPR-18 MS) and PPM (GPR-18) oxygen sensor is a sample system consisting of stainless steel and glass wetted parts, a unique proven leak-tight sensor housing design and a sample/bypass system.

The bypass system isolates the sensor from exposure to high oxygen concentration during transport, upset conditions and routine maintenance and bring the analyzer on-line at PPB and PPM levels very quickly. The sample/bypass valve is not required for the GPR-28.

Sample System: GPR-18 MS PPB O2 Analyzer / GPR-18 PPM O2 Analyzer

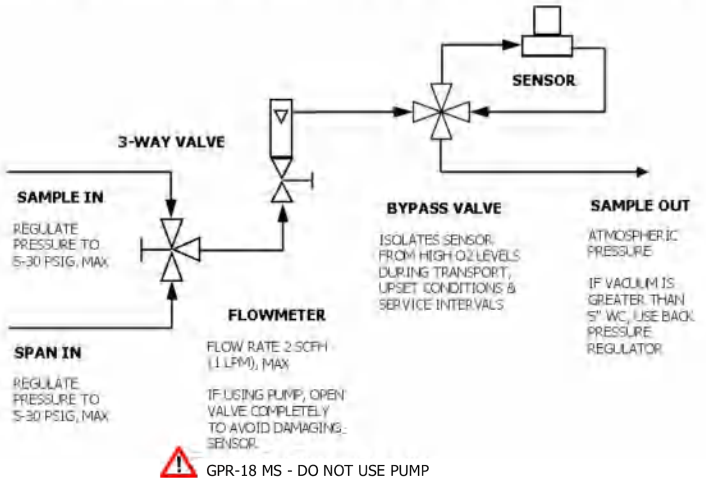

Sample System: GPR-28 % O2 Analyzer

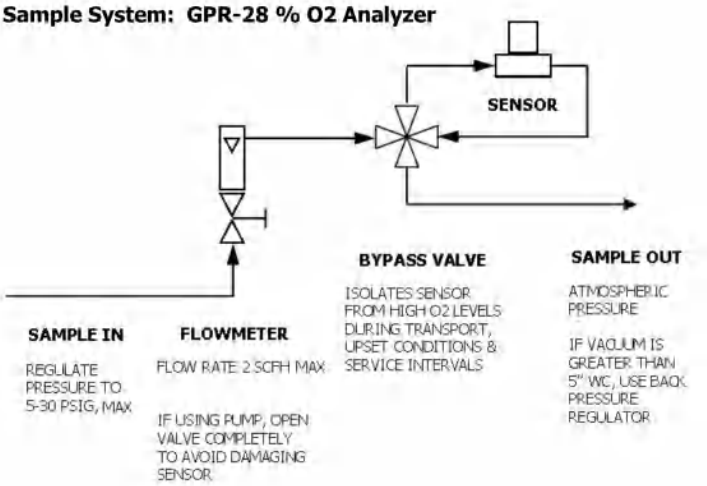

Establish Power to Electronics

Connect a power cable to analyzer's power terminal block. The electronics are rated for a power input of 100 or 230 VAC 50-60 Hz. With optional temperature-controlled heater system, however, supply only the voltage noted near the power terminal.

The LCD display will light up when power is applied to the analyzer. Assuming the analyzer has been installed as directed above, and the sensor has been installed at the factory, the reading displayed when the analyzer is turned on, reflects the oxygen value under static condition (i.e. the axiom that all valves and fittings leak, the sensor is looking at equilibrium point of oxygen diffusing into the sample system and oxygen consumed by the sensor).

Installing the Oxygen Sensor

Analyzers are shipped with the oxygen sensor that the analyzer was calibrated, qualified and tested with at the factory as documented by the Quality Control & Calibration Certification and chart recordings in section 12.

Circumstances vary but normally the oxygen sensor is installed prior to shipment and the analyzer is fully operational out of the box.

If the oxygen sensor was shipped separately or if a new oxygen sensor must be installed in the field, it will be necessary to install a new sensor.

The sensor is sealed in a special bag under application conditions. DO NOT open the bag until ready to install the sensor.

DO NOT open the oxygen sensor. The sensor contains a corrosive liquid electrolyte that could be harmful if touched or ingested, refer to section 10 Safety Data Sheet. Avoid contact with any liquid or crystal type powder in or around the sensor or sensor housing, as either could be a form of electrolyte. Spent sensor or a leaking sensor should be disposed of in accordance with local regulations.

After sensor installation, the analyzer must be calibrated to ensure correct sample analysis. Review section 4 Calibration to determine whether the next step is Zero or Span Calibration.

Depending on the circumstances and type of oxygen sensor, there are several procedures with different requirements as described on next page.

3. Installation

Procedure Applicable to GPR-18 MS and GPR-18 if Zero Calibration is to follow (section 4 Calibration):

1. Select the analyzer's highest range available range, adjust as the reading trends downward.
2. Initiate the flow of a high purity N2 zero gas, regulate the pressure to the lowest value expected in the sample gas and then set the flow rate, see section 11 Specification.
3. Place the Sample/Bypass valve in the Sample position before installing the oxygen sensor.
4. Use the 5/16 wrench supplied to loosen the clamp bolt under the sensor housing.
5. With the bolt loose, rotate the upper sensor housing 90° to disengage it from the clamp.
6. Remove the oxygen sensor from the bag (**if replacing an existing sensor see section 6**).
7. Place the oxygen sensor in the bottom section of the sensor housing, PCB facing up.
8. Remove the two red shorting strips (including the gold ribbon) from the sensor's PCB.
9. Place the upper section of the sensor housing over the oxygen sensor, gently push downward and rotate 90° to engage the clamp.
10. Use the 5/16 wrench to re-tighten the clamp bolt.
11. The analyzer will display the O2 content of the gas.
12. Confirm the downward trend of the O2 concentration with an external recording device.
13. Proceed to section 4 Calibration to complete Zero Calibration

Procedure Applicable to GPR-18 MS, GPR-18 and GPR-28 if Span Calibration is to follow:

1. Select the range that accommodates the O2 content of the span gas, see section 11 Specification.
2. Initiate the flow of span gas, regulate the pressure to the lowest value expected in the sample gas and then set the flow rate, see section 11 Specification.
3. Place the Sample/Bypass valve in the Sample position before installing the oxygen sensor.
4. Use the 5/16 wrench supplied to loosen the clamp bolt under the sensor housing.
5. With the bolt loose, rotate the upper sensor housing 90° to disengage it from the clamp.
6. Remove the oxygen sensor from the bag (**if replacing an existing sensor, see section 6**).
7. Immediately place the oxygen sensor in the bottom section of the sensor housing, PCB facing up.
8. Remove the two red shorting strips (including the gold ribbon) from the sensor's PCB.
9. Place the upper section of the sensor housing over the oxygen sensor, gently push downward
10. and rotate 90° to engage the clamp.
11. Use the 5/16 wrench to re-tighten the clamp bolt.
12. The analyzer will immediately display oxygen content of the gas.
13. Confirm the downward trend of the O2 concentration with an external recording device.
14. Proceed to section 4 Calibration.

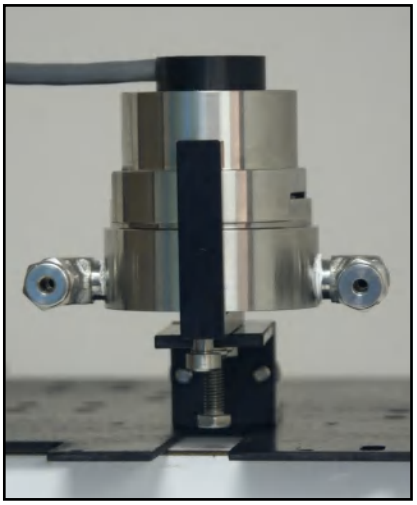

Procedure Applicable to GPR-18 and GPR-28 if Air Calibration is to follow:

1. Select the range of the analyzer to the 0-25% range.
2. Initiate the flow of sample gas, regulate the pressure to lowest value expected in the sample
3. Gas and then set the flow rate, see section 11 Specification.
4. Place the Sample/Bypass valve in the Sample position before installing the oxygen sensor.
5. Use the 5/16 wrench supplied to loosen the clamp bolt under the sensor housing.
6. After loosening the bolt, rotate the upper sensor housing 90° to disengage it from the clamp.
7. Remove the oxygen sensor from the bag (**if replacing an existing sensor, see section 6**).
8. Remove the two red shorting strips (including the gold ribbon) from the sensor PCB.
9. **Proceed to section 4 Calibration and follow the Air Calibration procedure.**
10. Upon completion of the Air Calibration procedure, immediately place the new sensor in the bottom section, PCB facing up.
11. Place the upper section of the sensor housing over the sensor, gently push downward and rotate 90° to engage the clamp.
12. Use the 5/16 wrench to re-tighten the clamp bolt.
13. The analyzer will immediately display the O2 content of the gas.
14. Confirm the downward trend of the O2 concentration with an external recording device.

4. Calibration

In order to accurately measure the oxygen concentration in a sample gas stream, it is necessary to calibrate (adjust the accuracy) the analyzer electronics to the oxygen sensor's signal output when exposed to certified gas standard. Calibration can involve one or both Zero and Span Calibrations.

The user is responsible for making provision for calibration gases and regulating the sample and span gas pressure and flow as described below.

Recommendation: Consider installing 3-way valves before the sample inlet to provide a permanent connection for Zero gas (if required) and/or Span gas and a means of switching from SAMPLE to ZERO or SPAN gas and vice versa without breaking gas line connections. This arrangement eliminates the possibility of exposing the sensor to high oxygen when changing gas lines to switch gas sources.

Accuracy

Single Point Calibration: The galvanic oxygen sensor generates an electrical current that is both linear and proportional to the oxygen concentration in the sample gas.

In the absence of oxygen, the sensor exhibits an absolute zero, e.g. the oxygen sensor **does not** generate a current signal output in the absence of oxygen. Given the specificity, linearity and absolute zero properties, a single point calibration of the analyzer is possible.

Pressure: Galvanic oxygen sensors are accurate at any pressure provided the pressure is constant. Oxygen sensors are sensitive to the partial pressure of oxygen in the sample gas and their output is a function of the number of oxygen molecules 'per unit volume' of the sample gas. The number of oxygen molecules per unit volume will increase proportionally with pressure.

Expected sensor life is inversely proportional to pressure.

Because pressure varies in real world applications, a flow control device is positioned between the pressure regulator and the oxygen sensor to reduce and stabilize the pressure at the oxygen sensor. The type of flow control valve or fixed restrictor varies with the flow sensitivity of the oxygen sensor.

The GPR-18MS oxygen sensor is more flow sensitive and requires the precision of a flow restrictor, whereas, the membrane clad oxygen sensors found in the GPR-18 and GPR-28 are not flow sensitive and use a metering valve to maintain the pressure.

Flow devices can minimize the influence of increasing pressure but drops in pressure actually change the partial pressure at the oxygen sensor.

To prevent erratic oxygen readings, set the flow rate only after the pressure is regulated, see section 11 Specifications, at the lowest pressure anticipated under sampling conditions.

Temperature: The rate at which oxygen molecules diffuse into the sensor is controlled by a Teflon membrane otherwise known as an 'oxygen diffusion limiting barrier. All diffusion processes are temperature sensitive, the sensor's electrical signal output also varies with temperature.

Changes in temperature result in a 2.54%/ºC variation in the sensor's signal output which inversely affects expected sensor life.

With reference to Dalton's Law of partial pressure, the oxygen diffusion limiting barrier allows and requires a small amount of the actual sample to permeate into the sensor to make the oxygen measurement. This provides several performance advantages:

1. Unaffected by changes in flow rate, 0.1 to 10 SCFH.
2. Unaffected by changes in background gases (except GPR-12-2000 MS Pico Ion PPB oxygen sensor).
3. Unaffected by moisture and particulates.

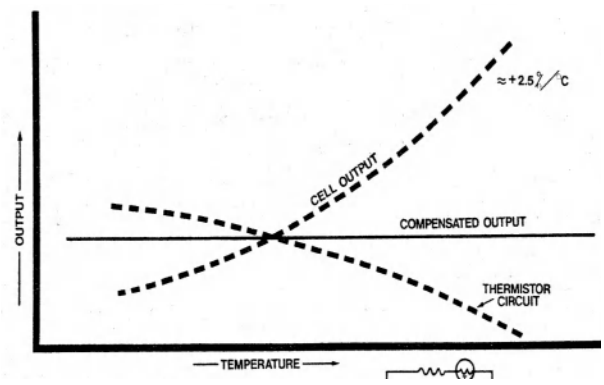

A temperature compensation circuit offsets the 2.54%/ºC variation in the sensor's signal output once the electronics and sensor's diffusion barrier and electrolyte reach equilibrium. Accuracy is ±5% full scale range over the operating temperature range, see section 11 Specifications.

A variation of ~10º F produces < 2% FS error in the O2 reading until equilibrium is reached.

To prevent erratic oxygen readings, calibrate the analyzer at the temperature nearest the temperature anticipated under sampling conditions

4. Calibration

Calibration Gas Preparation

It is essential that when using a certified standard zero or span gas to adjust the analyzer sensitivity that the integrity of the gas is maintained during installation of a pressure regulator (on the gas cylinder) to regulate the gas pressure when making
gas connection to the analyzer.

Required Components:

1. Certified zero or span (as recommended in section 11 Specifications) gas cylinder.
2. Regulator to set gas pressure to 5-30 psig.
3. Suitable fittings and 1/8" or 1/4" dia. metal tubing to connect the regulator to the flow meter/analyzer SAMPLE IN inlet
4. Suitable fitting and 1/8" or 1/4" metal tubing to connect from the flow meter vent to the analyzer tube fitting designated as SAMPLE OUT (Use additional flow meter only if the analyzer is not equipped with an integral flow meter.)

Procedure:

1. With the span gas cylinder valve closed, install the regulator on the cylinder.
2. Open the regulator's exit valve and partially open the pressure regulator's control knob.
3. Open slightly the cylinder valve.
4. Loosen the nut connecting the regulator to the cylinder and bleed the pressure regulator.
5. Retighten the nut connecting the regulator to the cylinder.
6. Adjust the regulator exit valve and slowly bleed the pressure regulator.
7. Open the cylinder valve completely and then close the regulator exit valve.
8. Set the pressure as specified in section 11 using the pressure regulator's control knob.
9. **Caution:** Do not exceed the recommended flow rate. Excessive flow rate could cause backpressure on sensor and may result in erroneous readings and permanent damage to sensor.

Zero Calibration

Zero Calibration (preceding Span Calibration) is required for optimum accuracy only when analyzing a sample with an expected value of less than 5% to 10% of the most sensitive range available. Perform a Zero Calibration when initially installing the analyzer, the customer's sample system is interrupted, and a new sensor is installed.

Zero Calibration produces an adjustment that is too small to affect the accuracy and thus is not recommended for the following measurements :

1. Above 10% of the most sensitive ranges on the GPR-18 MS and GPR-18.
2. 99% of percent range applications involving the GPR-28, which has no Zero Calibration capability.

In theory, the galvanic fuel cell type oxygen sensor has an absolute zero meaning it does generate a signal output when exposed to an oxygen free zero gas.

In reality, the sensor generates a signal output or positive oxygen reading when sampling a zero gas due to:

1. Minor leakage in the sample line connections.
2. Impurities in the zero gas, e.g. accuracy % tag.
3. Tolerances of the electronic components.
4. Lack of quality control during manufacturing of the sensor that results in residual oxygen dissolved inside the sensor.

The term **ZERO OFFSET** is applied to the fully stabilized oxygen reading evidenced by a flat horizontal trend on an external recording device after 12-30 hours of continuous exposure to flowing high purity zero gas.

This horizontal trend indicates:

1. The sensor has consumed all the oxygen that dissolved into the sensor's electrolyte during installation or exposure to high levels of oxygen,
2. The remaining oxygen value represents the sum total of elements 1-4 listed above,
3. The ZERO OFFSET value the analyzer electronics will deduct from all subsequent readings including Span Calibration for optimum accuracy.

The manufacturer's Quality Control testing prior to shipment confirms the zero offset, above, is within acceptable limits. However, owing to the **differences** in the user's sample system leakage and zero gas accuracy, no Zero Calibration adjustment is made by the factory.

The following Zero Calibration procedure assumes the user is installing the analyzer for the first time.

Procedure for Zero Calibration:

1. Connect the zero gas to either the sample inlet or Zero/Span valve if present.
2. Connect an external recording device to monitor the trend of the reading to the 0-1V or 4-20 mA analog signal outputs.
3. Refer to section 11 Specifications and set the pressure and flow rate as specified.
4. Initiate the flow of ultra-high purity nitrogen zero gas to the analyzer.
5. Allow 12-30 hours for the O2 trend to stabilize parallel to the X axis on the external recording device.

The time required for stabilization, clean-up, recovery, purge down depends on:

i) If the gas lines were adequately purged.
ii) Quality of the zero gas,
iii) Length of time the sensor was exposed to ambient air during installation, e.g. red shorting devices removed (unshorted) before being connected (shorted) to the upper section of the sensor housing.

PROCESS SENSING TECHNOLOGIES

4. Calibration

6. If after 2 hours, the oxygen value displayed is not below 5 PPM, perform a complete check of all external sample system connections and allow the zero gas to flow overnight before concluding the sensor is defective and notifying the factory.
7. Once the analyzer reading stabilizes, the reading should be well below 50% of the most sensitive range, the limit of the ZERO OFFSET adjustment.

Prematurely adjusting the ZERO control knob will result in erroneous low or even negative oxygen readings when sampling gases with very low O2 concentrations.

8. Turn the ZERO knob on the analyzer's front panel ½ turn at a time until the analyzer display reads 0.00 to complete the Zero Calibration and activate the ZERO OFFSET.
9. Place the Sample/Bypass valve in the Bypass position before disconnecting the zero gas line.
10. Connect the span gas line as described previously and allow the span gas to flow for 30 seconds to purge the ambient air through the gas lines.
11. Proceed to SPAN CALIBRATION

Subsequent Zero Calibration requires eliminating the previous ZERO OFFSET

Changes such as:

- Replacing the oxygen sensor
- Servicing the user's sample system
- Replacing an electronic PCB or other component
- Correcting for zero drift as determined by repeating the Zero Calibration procedure above.

require eliminating the prior ZERO OFFSET and performing a new Zero Calibration to establish a new ZERO OFFSET.

Procedure for Eliminating the Zero Offset:

1. Loosen the top section of the sensor housing, twist it 90 degrees and pull it up until it disengages from the sensor.
2. The resulting reading represents the ZERO OFFSET stored in the analyzer electronics.
3. Allow the reading to stabilize.
4. Adjust the ZERO knob on the analyzer's front panel until the analyzer reads 0.00.
5. After eliminating the ZERO OFFSET, the reading on all ranges should be zero with +/- one digit of the range.

Install the oxygen sensor and perform a new Zero Calibration as described above.

Span Calibration

Involves periodically adjusting the analyzer electronics to the sensor's signal output when it is exposed to a gas with a known oxygen content, see below or section 11.

Recommended Calibration Gases:

- **GPR-18 MS**: certified span gas of 7.5-9 PPM oxygen balance nitrogen.
- **GPR-18**: certified span gas of 75-90 PPM oxygen balance nitrogen or clean source ambient air 20.9% oxygen.
- **GPR-28**: clean source of ambient air 20.9% oxygen or a certified span gas oxygen balance with the oxygen content approximating 75–90% of FS.

The frequency of calibration varies with the application conditions, the degree of accuracy required and the Quality Assurance requirements of the user.

Ensure accuracy, allow the oxygen reading to stabilize on the certified span gas standard before making the Span Calibration adjustment.

The Span Calibration process itself only takes 15-30 minutes. However, the time required to bring the analyzer back on-line can vary depending on the span gas used, exposure time and purging the sensor after Span Calibration with the lowest oxygen concentration gas available.

Recommendations to minimize downtime (see Recovery section 11 Specifications)**:**

GPR-18 MS PPB Oxygen Analyzer:

1. Minimize exposure of the sensor to air when installing new sensor,
2. DO NOT calibrate with span gas containing more than 900 PPM oxygen balance nitrogen.
3. Change the gas line immediately upon completion of Span Calibration to lowest oxygen concentration gas available and purge:
   i) place the Sample/Bypass valve in the Bypass position,
   ii) change the gas lines from Span to lowest oxygen concentration gas available,
   iii) initiate the flow of low oxygen concentration gas and purge the gas lines for 30 seconds,
   iv) place the Sample/Bypass valve in the Sample position, allow the analyzer reading to stabilize,
4. If the lowest oxygen concentration gas was not the sample gas, repeat (3) above with the sample gas.

GPR-18: As above, except #2 is not applicable.

GPR-28: No special requirements.

4. Calibration

Procedure Span Gas Calibration:

1. Place the Sample/Bypass valve in the Bypass position.
2. Connect the span gas line to either the SAMPLE INLET or Zero/Span valve if present.
3. Connect a metal vent line to the fitting designated SAMPLE OUT or VENT.
4. **Optional:** Connect an external recording device to monitor the trend of the reading to the 0-1V or 4-20 mA analog signal outputs.
5. Assure there are no restrictions in the vent line.
6. Initiate the flow of the span gas to the analyzer.
7. Set the pressure and flow rate as described in the preceding **sub-section titled Accuracy**.
8. Purge the gas lines with span gas for 30 seconds.
9. Place the Sample/Bypass valve in the Sample position.
10. The sensor will detect the oxygen content in the span gas and the analyzer's reading will move toward it.
11. Ensure accuracy, allow the oxygen reading to stabilize (15-30 minutes) on the certified span gas standard before making the Span Calibration adjustment.
12. Turn the SPAN knob on the analyzer's front panel ½ turn at a time until the analyzer displays the oxygen content of the certified span gas standard.
13. Place the Sample/Bypass valve in the Bypass position before disconnecting the span gas line.
14. Connect the sample gas line as described previously and allow the sample gas to flow for 30 seconds to purge the ambient air through the gas lines.
15. Proceed to SAMPLING.

Procedure Ambient Air Calibration:

DO NOT calibrate the GPR-18MS with a span gas containing more than 900 PPM oxygen balance nitrogen.

1. Place the analyzer in the OXYGEN mode and select the CAL (0-25%) range.
2. Access the interior of the analyzer by removing the bolts securing the front door.
3. Using the 5/16 wrench supplied, loosen but do not remove the clamp bolt holding the two sections of the sensor housing.
4. Rotate the upper section of the sensor housing 90º to disengage from the clamp.
5. Remove the upper section by pulling it straight up and let it rest on your 1st and 2nd fingers.
6. With your other hand, remove the oxygen sensor from the bottom section of the housing.
7. Place the sensor in the upper section of the sensor housing ensuring the PCB contacts the two gold pins.
7. Use your thumb (see photo right) to hold the sensor and upper section of the sensor housing together.
8. With the sensor exposed to ambient air – allow the reading to stabilize for 1-2 minutes.
9. After the reading stabilizes, turn the SPAN knob until the LED display reads the 20.9%.

10. After air calibration, reinstall the sensor as previously described.
11. With sample gas flowing, the oxygen reading will start trending down.
12. Manually turn the RANGE selector switch to lower ranges and follow the progress of the sensor's recovery, see section 11 Specifications.
13. Proceed to SAMPLING.

Sampling

After ZERO and SPAN calibration, the analyzer is ready to analyze the sample gas stream. Select the appropriate range of interest by turning the RANGE selector switch to the desired range.

If the oxygen concentration is higher than the selected range, the display will show 1-- indicating over-range condition. If this occurs, select a higher range until the display show oxygen reading.

Adjust the flow rate if necessary as specified in section 11.

5. Operation

As detailed in section 1 Introduction, the Explosion Proof Series of Oxygen Analyzers are designed with an explosion proof enclosure, flame arrestors, breather device, actuators and ATEX certified for use in hazardous areas.

The preceding sections 2, 3, 4 detail the basic do's and don'ts, setup and calibration information, review them.

The analyzers share a common configuration, the differences separating the analyzers involves only the sensor as dictated by the level of oxygen analysis.

Analyzer Features

Oxygen Display
The analyzers are equipped with a 3-1/2 digit LED display that shows oxygen concentration from PPB to % level depending on the range of analysis selected.

Display Mode Selection
The DISPLAY SELECT slide switch (circled in red in photo at right) is located on the main signal processing PCB A-1106 mounted on the inside of analyzer front door. The slide switch has been set to the O2 position at the factory. Advance this slide switch to select one of the three available DISPLAY modes:

OXYGEN to display the oxygen reading
ALARM 1 to set Alarm 1 Set point
ALARM 2 to set Alarm 2 Set point

Oxygen Alarms
The analyzers are equipped with two user adjustable alarms that when activated trigger SPDT Form C, normally closed, non-latching relays rated @ 5A, 30VDC or 240VAC resistive.

The alarm set point represents a value. When the oxygen reading exceeds ALARM 2 (high alarm) or falls below ALARM 1 (low alarm) set point, the corresponding relay is activated.

The alarms are fully adjustable by the two potentiometers accessible from the auxiliary panel (circled in yellow in the photo at right) on the inside of the door with a small bladed screwdriver. Optionally, the alarm controls might have been installed external to the analyzer by using actuators.

To configure alarms as "Fail safe" (inactive when energized) - connect positive lead to NO and negative to the C, common or neutral.

To connect to an active relay, connect the live cable to the common terminal C and the secondary cable to the normally open NO terminal.

To break the connection upon relay activation, connect the secondary cable to the normally closed NC terminal.

To prevent chattering of the relays, the alarm will remain active until the oxygen reading has fallen 2% below the alarm set point (high alarm) or risen 2% above the alarm set point (low alarm) after the alarm was activated.

Procedure (see photo below):
1. Open the front door to access the DISPLAY SELECT slide switch (highlighted in red) located on the A-1107 PCB Assembly Main/Display.
2. Slide the switch to the ALM1 (high) or ALM2 (low).
3. The LED display indicates the current alarm set point.
4. The set point is displayed as a value on a given range.
5. Use a small bladed screwdriver to adjust the potentiometer slowly, a ½ a turn at a time to allow the electronic processing to catch up . . . until the display reads the desired alarm set point value.
6. Once the alarm values are set, slide the DISPLAY SELECT switch back to OXYGEN position.

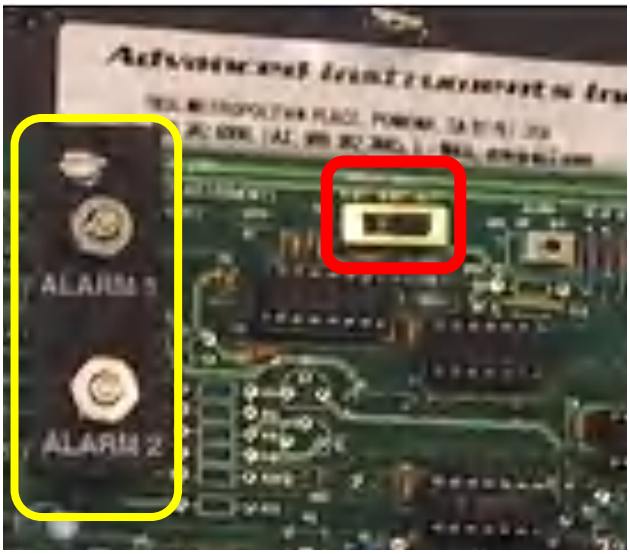

Power Fail Alarm
A dry contact rated at 1A @ 30 VDC is provided as a power failure alarm. The contact is normally open but closes when the power to the analyzer is switched off or interrupted.

Sensor Fail Alarm
A relay contact rated at 1A @ 30 VDC is provided for sensor fail alarm. The contact is normally open but closes when oxygen signal goes to zero or falls below zero.

Adjusting the ZERO OFFSET to 00.00 activates the Sensor Failure Alarm possibly causing a spike in the trend analysis. To avoid the momentary spike, set the ZERO OFFSET to 0.01 PPM. The sensor failure alarm becomes active when the display indicates '000' on any range of the analyzer.

5. Operation

Signal Outputs
The analyzer provides an isolated 4-20mA signal output and a 0-1V full scale signal output for external recording devices. The integral IC on the main PCB converts the 0-1V signal with negative ground to a 4-20mA fully isolated signal. A finer adjustment of the zero offset of the 4-20mA converter can be provided by a potentiometer, R99, mounted on the main PCB Assembly. Consult factory for instructions.

DO NOT supply any voltage to either of the two terminals of the 4-20mA converter. Supplying power to 4-20 mA IC will permanently damage the IC. The integral 4-20mA converter is internally powered and does not require external power.

Range ID
A voltage output corresponding to each range is provided. The output of the highest range (normally CAL) is 5V. The range ID voltage will change by 1V with each remaining range.

Temperature Controlled Heater System
If the optional temperature controlled heater system is installed, the temp controller is accessible only by opening the front door of the enclosure. The controller is PID and is set at the factory to maintain the analyzer interior temperature at 85°F.

DO NOT change this setting. A higher temperature setting may drastically reduce sensor life and possibly cause damage to the electronic circuitry of both the controller and the analyzer. When power is applied to the temperature controller, the controller initially tunes itself and then maintains the temperature at the set point.

It is recommended that at initial start-up, or when replacing oxygen sensor or when trouble shooting, set the set point around 60°F to turn heater off (to prevent overheating of heater element).

Keep the analyzer front door closed and securely fastened when the temperature controller is ON.

Heater Runaway Protection
As part of the optional temperature controlled heater system, the analyzer is protected in the event the temperature controller should fail and thereby allowing the heater to runaway damaging the interior of the analysis unit.

The protection is provided by a J2 type device positioned between the temperature controller and the heater. This device cuts off power to the heater if temperature inside the enclosure exceeds 70°C (158°F). Should the F2 device fail, correct the problem and replace J2.

Range Selection
See section 11 Specifications: the analyzers are equipped with four (4) standard measuring ranges. The GPR-18 is equipped with a 5th range of 0-25% for air calibration only. The ranges available are indicated around the RANGE selector knob located in the center of the control panel of the analyzer. Simply turn the pointer on the RANGE knob to the desired range.

If the oxygen concentration is higher than the selected range, the display will show 1---- indicating over-range condition. Select a higher range until the oxygen reading is displayed.

Before concluding the sensor is not "coming down to expected ppb or PPM levels" or "is not responding to sample gas":
1. Confirm that the display selector switch (highlighted in red in photo on previous page) inside of the enclosure door is positioned to the far right in the OXYGEN DISPLAY.
2. Perform a flow test as described in section 8 Troubleshooting to check for leaks in the sample system connections.
3. Perform a Span Calibration, as this condition could result from not allowing the oxygen reading to stabilize before making the adjustment.

Standby

- The analyzer has no special storage requirements.
- The sensor should remain installed in the sensor housing during storage periods – place the 4-way SAMPLE/BYPASS crossover valve in the BYPASS position.
- Store the analyzer with power OFF.

PROCESS SENSING TECHNOLOGIES

6. Maintenance

The extent of the maintenance requirements of this analyzer involves periodically replacing the oxygen sensor, cleaning and lubricating the o-ring in the sensor housing and the machined surfaces of the analyzer cover and bottom section.

While none of the components are serviceable in themselves, the section 7 Spare Parts is provided in the unlikely event a component fails and has to be replaced.

DO NOT attempt to service the analyzer or replace component parts on your own, consult the factory or a factory trained service technician. Please review section 9 Warranty.

Sensor Replacement

Periodically, the oxygen sensor will require replacement. Section 11 Specifications defines the normal operating conditions and expected life of the various sensors employed by the various analyzers.

Section 4 Calibration, Accuracy defines the factors that can influence the expected life of an oxygen. In reality, expected sensor life is determined by a number of factors that are influenced by the user and therefore virtually impossible to predict.

DO NOT open the oxygen sensor. The sensor contains a corrosive liquid electrolyte that could be harmful if touched or ingested, refer to section 10 Safety Data Sheet for information.

Install the replacement oxygen sensor as outlined in section 3 Installation, Installing the Oxygen Sensor.

Remove the existing sensor and dispose of in accordance with local regulations.

Analyzer Enclosure

Inspect and clean the machined surfaces of both the bottom base and the hinged cover of the enclosure.

The sealing surfaces must be inspected and free of nicks, dirt or any foreign particle build-up that would prevent a proper seal.

Cleaning & Closing the enclosure:

1. Wipe the sealing surfaces with a clean lint-free cloth.
2. Apply a light coating of Killark "LUBG" lubricant to the sealing surfaces.
3. Close the hinged cover and mate to bottom base.
4. Install the bolts thru the cover into bottom base,
5. Finger tighten,
6. Torque the bolts to 30 ft/lbs.

After installation, the unit must be inspected regularly to verify the enclosure mounting bolts are tight and in good condition, the cover bolts are torqued to 30ft/lbs., conduit/cable gland connections are intact and free of corrosion.

DO NOT attempt to repair the flange sealing surfaces should they appear to be damaged, they are not intended to be repaired. Contact the analyzer or enclosure manufacturer identified by one of the red metal labels affixed to the enclosure.

Troubleshooting: Consult the guidelines in section 8 for advice on the common operating errors before concluding that your analyzer is faulty. Do not attempt to service the analyzer beyond those means described in the Instructions for Use.

7. Spare Parts

Description	GPR-18 MS	GPR-18	GPR-28
Oxygen Sensor(s)	GPR-12-2000 MS2	GPR-12-333	GPR-11-32
		XLT-12-333 (CO2 Background)	XLT-12-333 (CO2 Background)
PCB Assy Power / Interconnection	A-1107-MS2	A-1107-M	A-1107-C
Sample Panel Assy	A-4753		A-4565
Sensor Housing Assy SS	A-1004-4-3-14	A-1004-4-3-5	
Sensor Housing SS Upper Assy w/Cable	B-2762-B-2-32	B-2762-A-2-32	
Valve 4-way Sample/Bypass	VALV-1031		Not Applicable
Amplifier E/I converter	IC-1007		
Breather Device 1/2" NPT	ENCL-1146		
Controller Temperature	CTRL-1004		
Flame Arrestor 1/2" NPT	FITN-1262		
Flowmeter Assy	A-4565		
Flowmeter SS, Max Inlet 200 psig, 1/8" FNPT, Scale 5	FMTR-1002		
Fuse Holder for TR5 Fuse	FUSE-1003		
Fuse 3A TR5 Series 250VAC	FUSE-1010		
Heater Rod 75W 240VAC	HTR-1006		
LCD 3.5 DGT 2VFS (29 / 19)	MTR-1002		
O-Ring Viton Black Size -126	ORNG-1007		
PCB Assy Main / Display	A-1106-C		
Sensor Housing SS Bottom Assy	A-4541-4		
Sensor Temperature Pepi J2 Runaway Protector	SNSR-1002		
Temperature Sensor RTD	SNSR-1006		

8. Troubleshooting

Symptom	Possible Cause	Recommended Action
Slow recovery or response time	At installation, defective sensor	Replace sensor if recovery unacceptable or O_2 reading fails to reach 10% of lowest range
	Failure to purge gas lines with Bypass, air leak in connections, dead legs, distance of sample line, low flow rate, volume of optional filters and scrubbers	Leak test the entire sample system: Vary the flow rate, if the O_2 reading changes inversely with the change in flow rate indicates an air leak - correct source of leak
	Abnormality in zero gas	Qualify zero gas (using portable analyzer)
	Damaged in service - prolonged exposure to air, electrolyte leak	Replace sensor
	Sensor nearing end of life	Replace sensor
High O_2 reading after installing or replacing sensor	Analyzer calibrated before sensor stabilized caused by: 1) Prolonged exposure to ambient air, worse if sensor was **unshorted** 2) Air leak in sample system connection(s) 3) Abnormality in zero gas	Allow O_2 reading to stabilize before making the span/calibration adjustment Continue purge with zero gas Leak test the entire sample system (above) Qualify zero gas (using portable analyzer)
High O_2 reading Sampling	Flow rate exceeds limits	Correct pressure and flow rate
	Pressurized sensor	Remove restriction on vent line, replace sensor
	Improper sensor - CO_2 affects GPR sensor	Use XLT sensor when CO_2 or acid gases are present
	Abnormality in gas	Qualify the gas (use a portable analyzer)
Reading doesn't agree to expected O_2 values	Pressure and temperature of the sample is different than span gas	Calibrate the analyzer (calibrate at pressure and temperature of sample)
	Abnormality in gas	Qualify the gas (use a portable analyzer)
	Failure to allow reading to stabilize before zero and/or span calibration adjustments	Repeat calibration procedure and allow reading (sensor) to stabilize
	Calibration error caused by turning the zero and/or span potentiometer more than ½ turn at a time (electronics need time to keep up	Repeat calibration, allow reading to stabilize and make adjustments ½ turn at a time

8. Troubleshooting

Symptom	Possible Cause	Recommended Action
Erratic O_2 reading	Change in sample pressure	Repeat calibration at the temperature and pressure of sample
	Dirty electrical contacts in upper section of sensor housing	Clean contacts with alcohol (minimize exposure time of MS sensor to ambient air to extent possible)
	Corroded solder joints on sensor PCB from corrosive sample or electrolyte leakage from sensor	Replace sensor and return sensor to the factory for warranty determination
	Corroded spring loaded contact in upper section of sensor housing from liquid in sample or electrolyte leakage from sensor	**Upper section of sensor housing:** Clean contacts with alcohol, flow sample or zero gas for 2-3 hours to flush sample system and sensor housing **Sensor:** Replace if leaking and return it to the factory for warranty determination
	Liquid covering sensing area	Wipe with alcohol and lint free towel or flow sample or zero gas for 2-3 hours to flush
	Presence of interference gases	Consult factory
	Presence of sulfur gases and/or CO_2	Replace sensor and install scrubber, contact factory
	Unauthorized maintenance	Replace sensor, obtain authorized service
No O_2 reading Negative O_2 reading	Failure of an electronic component or power surge that sends a charge to the sensor	Service the analyzer, check the power source and THEN replace the sensor
	Pressurizing the sensor by: a) Flowing gas to the sensor with the vent restricted or SHUT OFF valve closed and suddenly removing the restriction draws a vacuum and can damage the sensor and/or cause electrolyte leakage b) Drawing a vacuum on the sensor by partially opening the FLOW valve upstream of the sensor when using a pump downstream to draw sample from a process at atmospheric pressure or a slight vacuum can damage the sensor and cause it to leak electrolyte	Introduce span gas to determine if the sensor responds. If successful calibrate the analyzer and resume sampling If not successful, inspect for electrolyte leakage, check and clean the contacts in the upper section of the sensor housing, flow a little warm water followed by air or clean sample through the analyzer for 2-3 hours to push the electrolyte through the sample system and THEN replace the sensor

9. Warranty

The design and manufacture of Analytical Industries Inc. oxygen analyzers and oxygen sensors are performed under a certified Quality Assurance System that conforms to established standards and incorporates state of the art materials and components for superior performance and minimal cost of ownership. Prior to shipment every analyzer is thoroughly tested by the manufacturer and documented in the form of a Quality Control Certification that is included in the Owner's Manual accompanying every analyzer. When operated and maintained in accordance with the Owner's Manual, the units will provide many years of reliable service.

Coverage
Under normal operating conditions, the analyzers and sensors are warranted to be free of defects in materials and workmanship for the period specified in accordance with the most recent published specifications, said period begins with the date of shipment by the manufacturer. The manufacturer information and serial number of this analyzer are located on the rear of the analyzer. Analytical Industries Inc. reserves the right in its sole discretion to invalidate this warranty if the serial number does not appear on the analyzer.

If your Analytical Industries Inc. analyzer and/or oxygen sensor is determined to be defective with respect to material and/or workmanship, we will repair it or, at our option, replace it at no charge to you. If we choose to repair your purchase, we may use new or reconditioned replacement parts. If we choose to replace your Analytical Industries Inc. analyzer, we may replace it with a new or reconditioned one of the same or upgraded design. This warranty applies to all monitors, analyzers and sensors purchased worldwide. It is the only one we will give, and it sets forth all our responsibilities.

There are no other express warranties. This warranty is limited to the first customer who submits a claim for a given serial number and/or the above warranty period. Under no circumstances will the warranty extend to more than one customer or beyond the warranty period.

Limitations
Analytical Industries Inc. will not pay for: loss of time; inconvenience; loss of use of your Analytical Industries Inc. analyzer or property damage caused by your Analytical Industries Inc. analyzer or its failure to work; any special, incidental or consequential damages; or any damage resulting from alterations, misuse or abuse; lack of proper maintenance; unauthorized repair or modification of the analyzer; affixing of any attachment not provided with the analyzer or other failure to follow the Owner's Manual. Some states and provinces do not allow limitations on how an implied warranty lasts or the exclusion of incidental or consequential damages, these exclusions may not apply.

Exclusions
This warranty does not cover installation; defects resulting from accidents; damage while in transit to our service location; damage resulting from alterations, misuse or abuse; lack of proper maintenance; unauthorized repair or modification of the analyzer; affixing of any label or attachment not provided with the analyzer; fire, flood, or acts of God; or other failure to follow the Owner's Manual.

Service
Call Analytical Industries Inc. at 909-392-6900 (or e-mail info@aii1.com) between:

7:30 AM and 5:00 PM PST . . . Monday thru Thursday
8:00 AM and 12:00 PM PST . . . Friday.

Trained technicians will assist you in diagnosing the problem and arrange to supply you with the required parts. You may obtain warranty service by returning you analyzer, postage prepaid to:

Analytical Industries Inc.
2855 Metropolitan Place
Pomona, Ca 91767 USA

Be sure to pack the analyzer securely. Include your name, address, telephone number, and a description of the operating problem. After repairing or, at our option, replacing your Analytical Industries Inc. analyzer, we will ship it to you at no cost for parts and labor.

PROCESS SENSING TECHNOLOGIES

10. Safety Data Sheet

I. Product Identification

Product Name:	Oxygen Sensor (Series AII, GPR, PSR, Private Label derivations)
Manufacturer:	Analytical Industries Inc. 2855 Metropolitan Place, Pomona, CA 92767 USA
Contact Information:	Tel: 909-392-6900, Fax: 909-392-3665, email: info@aii1.com
Date Prepared:	January 1, 1995
Date Revised:	January 1, 2013

II. Hazardous Ingredients / Composition

Material	C.A.S. #	Quantity	OSHA PEL	ACGIH
Lead (Pb)	7439-92-1	5-25 gms	0.05 mg/m^3	0.15 mg/m^3
Potassium Hydroxide (KOH)	1310-58-3	1-10 ml	2 mg/m^3	2 mg/m^3

III. Health Hazard Data

		Lead (Pb) - Anode	Potassium Hydroxide (KOH) - Electrolyte
Routes of Entry:	Inhalation:	Very unlikely.	Very unlikely.
	Ingestion:	May be harmful or fatal if swallowed.	May be harmful or fatal if swallowed.
	Skin:	NA	Contact may cause irritation or chemical burns.
	Eyes:	NA	Contact may cause irritation or chemical burns.
Acute Effects:		NA	Corrosive, harmful if swallowed, inhaled or absorbed through the skin. Very destructive to tissue of the mucous membranes, stomach, mouth, upper respiratory tract, eyes and skin.
Chronic Effects:		Very unlikely due to product content. May cause disease of blood and blood organs, kidneys, liver, a decrease in fertility, damage to the reproductive system and damage to the fetus of a pregnant woman.	Prolonged exposure is destructive to tissue.
Symptoms of Exposure:		Loss of sleep and appetite, metallic taste and fatigue. For detail information refer to 29 CFR 1910.1025, Appendix A	Slippery to touch, burning sensation to skin and eyes.
Carcinogenicity:		IARC class 2B (lead is possibly carcinogenic to human beings)	NA
OSHA:		If airborne exposure exceed action level refer to OSHA Lead Standard 1910.1025	NA
NTP:		NA	NA
Medical Conditions Generally Aggravated by Exposure:		Disease of the blood and blood forming organs, hypertension, kidneys, nervous and possibly reproductive systems.	Preexisting skin or eye disorders may be more susceptible to the effects of the electrolyte.

IV. Emergency First Aid Procedures

Lead (Pb) - Anode: NA

Potassium Hydroxide (KOH) - Electrolyte: Following any event: Obtain medical attention immediately.

Skin or eye contact: Immediately flush with generous amounts of water. Continue flushing with water for 15 minutes. Remove all contaminated clothing.

Ingestion: Drink generous amounts of water. DO NOT INDUCE VOMITING.

Inhalation: Relocate to source of clean ambient air.

V. Fire and Explosion Hazard Data

Material	Flash Point	Flammable Limits	LEL	UEL
Lead (Pb)	NA	NA	NA	NA
Potassium Hydroxide (KOH)	NA	NA	NA	NA

Unusual Fire / Explosion Hazards: NA

Extinguishing Media: No specific agents recommended, use media appropriate to fire conditions.

Special Equipment: NIOSH / OSHA approved self-contained breathing apparatus, protective clothing to prevent contact with skin and eyes.

VI. Cleanup Procedures

Saturate a paper towel with tap water and wipe down the area.
Repeat several times with a new paper towel.
Used or contaminated paper towels are considered hazardous waste, refer to section XIII. Disposal Considerations.

VII. Precautions for Safe Handling and Use

Attention: Under normal circumstances the lead anode and potassium hydroxide electrolyte are sealed inside the oxygen sensor which is then\ sealed in a polyethylene bag and placed in a cardboard box for shipment) and do not present a health hazard. The following guidelines are provided in the event an oxygen sensor leaks electrolyte.

Protective Measures: Before installing (initially or replacement) a new oxygen sensor, open the cardboard box and check for electrolyte leakage inside the polyethylene bag. Some bags are clear and easily inspected,

Other bags are not clear and like sensor housings inside analyzers must be opened to be inspected. A clear liquid inside the clear polyethylene bag indicates an electrolyte leak, do not open the bag.

Anytime the oxygen sensor is not readily visible always open slowly and visually inspect for evidence of a clear liquid indicating an electrolyte leak.

Refer to section VIII. Personal Protection recommendations for hand, skin and eye protection when handling oxygen sensors that have leaked electrolyte.

VIII. Personal Protection Exposure Controls

Eye Protection:	Chemical splash goggles.
Hand Protection:	Rubber or latex gloves.
Other Protective Clothing:	Apron, face shield.
Ventilation:	NA

IX. Physical / Chemical Characteristics

Material / Component:	Lead (Pb) - Anode	Potassium Hydroxide (KOH) - Electrolyte
Boiling Point (°C):	1744	1320
Specific Gravity:	11.34	2.04
Vapor Pressure:	NA	NA
Melting Point (°C):	328	360
Density:	NA	NA
Evaporation Rate:	NA	NA
Solubility in Water:	Insoluble	Complete
Odor / Physical Appearance:	Odorless, solid, silver gray	Odorless, crystals, white or slightly yellow (When combined with H2O - odorless, clear liquid)

X. Stability and Reactivity

Material / Component:	Lead (Pb) - Anode	Potassium Hydroxide (KOH) - Electrolyte
Stability:	Stable	Stable
Incompatibilities:	NA	Aluminum, organic materials, acid chlorides, acid anhydrides, magnesium, copper. Avoid contact with acids and hydrogen peroxide >52%.
Hazardous Decomposition:	NA	Toxic fumes.
Hazardous Polymerization:	NA	Will not occur.

XI. Toxicological Information

Toxicity to Animals:	Calculated value for KOH electrolyte solution - acute oral toxicity (LD50): 2730 mg/kg (Rat)
Mutagenicity:	Lead tested positive as a mutagen in the Ames test.

XII. Ecological Information

Ecotoxicity:	The LC50 of lead for the daphnia magna is 3.6 mg/l, and 5.1 mg/l for the daphnia pulex.
Environmental Fate:	Lead is bioaccumulative in most aquatic life and mammals. It is highly mobile as dust or fumes (30 mesh is the smallest particle size found inside the oxygen sensor), yet forms complexes with organic material which limits its mobility.

XIII. Disposal Considerations

Waste must be disposed of in accordance with Federal, State and Local environmental control regulations. If discarded in its purchased form, this product is hazardous by its characteristics of toxicity and corrosivity under RCRA.

EPA Waste Number: D008, D002

DOT Information: Corrosive liquid, basic, inorganic, n.o.s. (potassium hydroxide, lead), 8, UN 3266, II.
Follow all Federal, State and Local regulations.

XIV. Transport Information

DOT: Regulated. Meets criteria for Small Quantity Exceptions of 49 CFR 173.4

IATA: Regulated. Meets criteria for IATA Dangerous Goods in Excepted Quantities, Section 2.7

XV. Regulatory Information

U.S. Federal Regulations

1) OSHA Hazardous by definition of Haz Com Std. 29 CFR 1910.1200

2) SARA TITLE III Sec 302 (40 CFR Part 365): **Not Applicable** as to chemical name, CAS#, %, TPQ lbs., RQ

Sec 311 & 312: **YES** as to Acute and Chronic Health Hazard;
NO as to Fire and Sudden Release of Pressure Hazard, Reactive

Sec 313 (40 CFR Part 372): This product contains the following toxic chemicals subject to the reporting requirements of Section 313, of Title III of the Superfund Amendments and Reauthorization Act of 1986 and 40 CFR Part 372

Chemical Name	CAS #	Lead Content
Lead	7439-92-1	5-25 gms

3) TSCA (Toxic Substances Control Act): Components of this product are listed on the TSCA inventory.

4) CERCLA Section 102(A) (40 CFR Part 302) - Hazardous Substances and Reportable Quantities

Chemical Name	CAS #	RQ
Lead	7439-92-1	10 lbs.
Potassium Hydroxide (solid)	1310-58-3	1,000 lbs.

5) State Regulations California Proposition 65: WARNING: This product contains lead, a chemical known to the State of California to cause cancer, birth defects or other reproductive harm.

Massachusetts: Potassium Hydroxide is a listed chemical.

Pennsylvania: Potassium Hydroxide is a listed chemical.

International Regulations

Canada:	Canadian Environmental Protection Act (CEPA)	Potassium Hydroxide, liquid, is on the Domestic Substances List (DSL) and is acceptable for use under the provisions of CEPA.	
	WHMIS:	Chemical Name	Class
		Potassium Hydroxide	D-2A: Material causing other VERY TOXIC effects. E: Corrosive liquid
		Lead	D-2A: Material causing other VERY TOXIC effects.
European Community:	Potassium Hydroxide (liquid)	R35 - Causes severe burns. R42 - May cause sensitization by inhalation. R36/37/38 - Irritating to eyes, respiratory system and skin.	

XVI. Other Information

All chemicals may pose unknown hazards and should be used with caution. While the information contained in this Material Safety Data Sheet is believed to be correct and is offered for your information, consideration and investigation, Analytical Industries Inc. assumes no responsibility for the completeness or accuracy of the information contained herein.

10. Safety Data Sheet

I. Product Identification

Product Name:	Oxygen Sensor (Series XLT, Private Label derivations)
Manufacturer:	Analytical Industries Inc. 2855 Metropolitan Place, Pomona, CA 92767 USA
Contact Information:	Tel: 909-392-6900, Fax: 909-392-3665, email: info@aii1.com
Date Prepared:	January 1, 1995
Date Revised:	January 1, 2013

II. Hazardous Ingredients / Composition

Material	C.A.S. #	Quantity	OSHA PEL	ACGIH
Lead (Pb)	7439-92-1	5-10 gms	0.03 mg/m^3	0.15 mg/m^3
Acetic Acid, Glacial*	64-19-7	1-3 ml	TWA 10 ppm	TLV 10 ppm; STEL 15 ppm
*Data pertains to concentrations >80%, actual solution >10% but not >80%				
Lead Acetate, Trihydrate	6080-56-4	< 1 ml	0.05 mg(Pb)/m^3	0.15 mg(Pb)/m^3
Potassium Acetate	127-08-2	< 1 ml	NA	NA

III. Health Hazard Data

		Lead (Pb) - Anode	Acetic Acid	Lead Acetate (Electrolyte)	Potassium Acetate
Routes of Entry:	Inhalation:	Very unlikely.	Very unlikely (liquid electrolyte).		
	Ingestion:	May be harmful or fatal if swallowed.	May be harmful or fatal if swallowed.		
	Skin:	NA	Contact may cause irritation or chemical burns.		
	Eyes:	NA	Contact may cause irritation or chemical burns.		
Acute Effects:		NA	Corrosive, harmful if swallowed, inhaled or absorbed through the skin. Headache, nausea, vomiting, dizziness, gastrointestinal irritation.		
Chronic Effects:		Very unlikely due to product content. May cause disease of blood and blood organs, kidneys, liver, a decrease in fertility, damage to the reproductive system and damage to the fetus of a pregnant woman.	Anemia, kidney damage, blurred vision, lead build-up in the central nervous system.		
Symptoms of Exposure:		Loss of sleep and appetite, metallic taste and fatigue. For detail information refer to 29 CFR 1910.1025, Appendix A	Tightness and pain in the chest, coughing, difficult breathing. Slippery to touch, burning sensation to skin and eyes.		

Carcinogenicity:	IARC class 2B (lead is possibly carcinogenic to to human beings)	None identified.	IARC animal carcinogen.	None identified.
OSHA:	If airborne exposure exceeds action level refer to OSHA Lead Standard 1910.1025	NA	NA	NA
NTP:	NA	NA	NA	NA
Medical Conditions Generally Aggravated by Exposure:	Disease of the blood and blood forming organs, hypertension, kidneys, nervous and possibly reproductive systems.	Diseases of respiratory system and skin.	None identified.	None identified.

IV. Emergency First Aid Procedures

	Lead (Pb) - Anode	Acetic Acid	Lead Acetate (Electrolyte)	Potassium Acetate
Following any event:	NA	Obtain medical attention immediately.		
Skin or eye contact:		Immediately flush with generous amounts of water. Continue flushing with water for 15 minutes. Remove all contaminated clothing.		
Ingestion:		Drink generous amounts of water. DO NOT INDUCE VOMITING.		
Inhalation:		Relocate to source of clean ambient air.		

V. Fire and Explosion Hazard Data

Material	Lead (Pb) - Anode	Acetic Acid	Lead Acetate (Electrolyte)	Potassium Acetate
Flash Point	NA		NA	
Flammable Limits	NA		NA	
LEL	NA		NA	
UEL	NA		NA	
Unusual Fire / Explosion Hazards	NA		NA	
Extinguishing Media:	NA	No specific agents recommended, use media appropriate to fire conditions.		
Special Equipment:	NIOSH / OSHA approved self-contained breathing apparatus, protective clothing to prevent contact with skin and eyes.			

VI. Cleanup Procedures

Saturate a paper towel with tap water and wipe down the area.
Repeat several times with a new paper towel.
Used or contaminated paper towels are considered hazardous waste, refer to section XIII. Disposal Considerations.

VII. Precautions for Safe Handling and Use

Attention: Under normal circumstances the lead anode and potassium hydroxide electrolyte are sealed inside the oxygen sensor which is then\ sealed in a polyethylene bag and placed in a cardboard box for shipment) and do not present a health hazard. The following guidelines are provided in the event an oxygen sensor leaks electrolyte.

Protective Measures: Before installing (initially or replacement) a new oxygen sensor, open the cardboard box and check for electrolyte leakage inside the polyethylene bag. Some bags are clear and easily inspected,

Other bags are not clear and like sensor housings inside analyzers must be opened to be inspected. A clear liquid inside the clear polyethylene bag indicates an electrolyte leak, do not open the bag.

Anytime the oxygen sensor is not readily visible always open slowly and visually inspect for evidence o a clear liquid indicating an electrolyte leak.

Refer to section VIII. Personal Protection recommendations for hand, skin and eye protection when handling oxygen sensors that have leaked electrolyte.

VIII. Personal Protection Exposure Controls

Eye Protection:	Chemical splash goggles.
Hand Protection:	Rubber or latex gloves.
Other Protective Clothing:	Apron, face shield.
Ventilation:	NA

IX. Physical / Chemical Characteristics

Material / Component:	Lead (Pb) - Anode	Acetic Acid	Lead Acetate (Electrolyte)	Potassium Acetate
Boiling Point (°C):	1744		NA	
Specific Gravity:	11.34		1.01	
Vapor Pressure:	NA		NA	
Melting Point (°C):	328		NA	
Density:	NA		NA	
Evaporation Rate:	NA		NA	
Solubility in Water:	Insoluble		Complete	
Odor / Physical Appearance:	Odorless, solid, silver gray		Vinegar like odor, clear liquid.	

X. Stability and Reactivity

Material / Component:	Lead (Pb) - Anode	Acetic Acid	Lead Acetate (Electrolyte)	Potassium Acetate
Stability:	Stable		Stable	
Incompatibilities:	NA		Bases, oxidizing agents, non-precious metals, copper.	
Hazardous Decomposition:	NA		Toxic fumes.	
Hazardous Polymerization:	NA		Will not occur.	

XI. Toxicological Information

	Lead (Pb) - Anode	Acetic Acid	Lead Acetate	Potassium Acetate
Toxicity to Animals:	Acute oral toxicity LD50	Acute oral toxicity LD50: 2730 mg/kg (Rat).		
Mutagenicity:	Tested positive as a mutagen in Ames test.		NA	

XII. Ecological Information

Ecotoxicity: The LC50 of lead for the daphnia magna is 3.6 mg/l, and 5.1 mg/l for the daphnia pulex.

Environmental Fate: Lead is bioaccumulative in most aquatic life and mammals. It is highly mobile as dust or fumes (30 mesh is the smallest particle size found inside the oxygen sensor), yet forms complexes with organic material which limits its mobility.

XIII. Disposal Considerations

Waste must be disposed of in accordance with Federal, State and Local environmental control regulations. If discarded in its purchased form, this product is hazardous by its characteristics of toxicity and corrosivity under RCRA.

Material / Component:	Lead (Pb) - Anode	Acetic Acid	Lead Acetate (Electrolyte)	Potassium Acetate
EPA Waste Number:	D008	D002	U144	NA

DOT Information: Corrosive liquid, acidic, inorganic, n.o.s. (lead, acetic acid), 8, UN 3266, II.
Follow all Federal, State and Local regulations.

XIV. Transport Information

DOT: Regulated. Meets criteria for Small Quantity Exceptions of 49 CFR 173.4

IATA: Regulated. Meets criteria for IATA Dangerous Goods in Excepted Quantities, Section 2.7

XV. Regulatory Information

U.S. Federal Regulations

1) OSHA — Hazardous by definition of Haz Com Std. 29 CFR 1910.1200

2) SARA TITLE III — Sec 302 (40 CFR Part 365): **Not Applicable** as to chemical name, CAS#, %, TPQ lbs., RQ

Sec 311 & 312: **YES** as to Acute and Chronic Health Hazard;
NO as to Fire and Sudden Release of Pressure Hazard, Reactive

Sec 313 (40 CFR Part 372): This product contains the following toxic chemicals subject to the reporting requirements of Section 313, of Title III of the Superfund Amendments and Reauthorization Act of 1986 and 40 CFR Part 372

Chemical Name	CAS #	Lead Content
Lead	7439-92-1	5-25 gms

3) TSCA (Toxic Substances Control Act): Components of this product are listed on the TSCA inventory.

4) CERCLA Section 102(A) (40 CFR Part 302) - Hazardous Substances and Reportable Quantities

Chemical Name	CAS #	RQ
Lead	7439-92-1	10 lbs.

International Regulations

Canada:

Canadian Environmental Protection Act (CEPA): Potassium Hydroxide, liquid, is on the Domestic Substances List (DSL) and is acceptable for use under the provisions of CEPA.

WHMIS:

Chemical Name	Class
Acetic Acid, Lead Acetate	D-2A: Material causing other VERY TOXIC effects E: Corrosive liquid
Lead	D-2A: Material causing other VERY TOXIC effects

European Community:

Acetic Acid, Lead Acetate (liquid):
R10-35 - Causes severe burns.
R42 - May cause sensitization by inhalation.
R36/37/38 - Irritating to eyes, respiratory system and skin.

XVI. Other Information

All chemicals may pose unknown hazards and should be used with caution. While the information contained in this Material Safety Data Sheet is believed to be correct and is offered for your information, consideration and investigation, Analytical Industries Inc. assumes n responsibility for the completeness or accuracy of the information contained herein.

11. Specifications

Analytical Industries Inc.

ATEX / IECEx Certified for Hazardous Area Use

GPR-18MS PPB
GPR-18 PPM
GPR-28 %

Explosion Proof Oxygen Analyzers

Full Featured O2 Analyzers with Advanced Galvanic Sensor Technology

- 3 Analyzers PPB, PPM, %
- 1 State of the Art Platform
- Sensitivity 0.5% Full Scale
- 4-20 mA Signal Output
- 2 Field Adjustable Alarms
- SS Wetted Parts
- Sample / Bypass Valve
- Flame Arrestors
- Breather Device

Directive 2014/34/EU; IECEx Scheme

ATEX Certificate: INERIS 07ATEX0025X
IECEx Certificate: IECEx INE 19.0054X

Ex II 2 G
Ex db IIB or IIB+H2 T6 Gb

ISO 9001 : 2015 Certified

11. Specifications

Analytical Industries Inc.

Technical Specifications

	GPR-18 MS PPB	GPR-18 PPM	GPR-28 %
Accuracy:	± 1% of FS range under constant conditions		
Analysis Ranges:	0-1 PPM, 0-10, 0-100, 0-1000 PPM FS	0-10, 0-100, 0-1000 PPM, 0-1%, 0-25%	0-1%, 0-5%, 0-10%, 0-25% FS
Application:	10 PPB to 1000 PPM oxygen contamination in inert, hydrocarbon, He, H2 and mixed gases streams	50 PPB to 1% oxygen contamination in inert, hydrocarbon, He, H_2, mixed, and acid (CO_2) gas streams (a)	0.05% to 100% oxygen measurements in inert, hydrocarbon, He, H_2, mixed and acid (CO_2) gas streams (b)
ATEX // IECEx Classification:	Ex II 2 G Ex db IIB or IIB+H2 T6 Gb // Ex db IIB or IIB+H2 T6 Gb		
Alarms:	2 adjustable form C relay contacts non-latching; sensor and power failure		
Calibration:	1 month intervals using certified gas of 7.5 - 9 PPM O_2 balance N_2	1 month intervals using certified gas of 75 - 90 PPM O_2 balance N_2 or 20.9% air	1 month intervals using 20.9% air
Compensation:	Temperature		
Connections:	1/4" compression tube fittings		
Controls:	Explosion proof actuators for range selection, zero and span calibration adjustments		
Display:	3-1/2 digit bright red LCD; resolution .001 PPM		
Enclosure:	Unpainted aluminum 16″ x 18″ x 11″ wall mount, 70 lbs.		
Flow Sensitivity:	Flow sensitive, 1 SCFH recommended	Not flow sensitive, 1-2 SCFH recommended, 2 SCFH max	
Linearity:	< 1% over all ranges		
Pressure:	Inlet - regulate to 20-50 psig max; Vent - atmospheric not to exceed ±5″	Inlet - regulate to 5-30 psig max; Vent - atmospheric not to exceed ±14″ water column	
Power:	Specify 100/120 or 220/240 VAC		
Recovery Time:	O_2 Level / Duration / O_2 Target / Recovery	O_2 Level / Duration / O_2 Target / Recovery on	O_2 Level / Duration / O_2 Target / Recovery
	Air / 30 sec / 1 PPM / 45 min	Air / 2 min / 10 PPM / 60 min *	Air / 2 min / 0.1% PPM / < 30 sec
	9 PPM / 2 min / 10 PPB / 10 min	Air / 2 min / 1 PPM / 20 min **	
	1 PPM / 5 min / 10 PPB / 15 min	* Installation ** In service for 2 weeks at 1	
Response Time:	90% of final FS reading < 20 seconds	90% of final FS reading < 10 seconds	
Sample System:	Flow control and bypass valves; flow indicator		Flowmeter with integral valve
Sensitivity:	< 0.5% of FS range		
Sensor Model:	GPR-12-2000MS	GPR-12-333 (a)	GPR-11-32 (b)
Sensor Life:	12 mos in < 100 PPM O2 at 25ºC and 1	24 mos in < 1000 PPM O2 at 25ºC and 1	32 mos in air at 25ºC and 1 atm
Signal Output:	4-20mA isolated and 0-1V		
Temp. Range:	Enclosure –20º to +60ºC		
Temp. Range:	Sensor 0º to 45ºC	Sensor 0º to 45ºC (GPR), -10º to +45ºC (XLT)	
Warranty:	12 months analyzer; 12 months sensor		
Wetted Parts:	300 series stainless steel		

Optional Equipment	Optional Equipment	Optional Equipment
Not suitable for CO_2 background gas	(a) XLT-12-333 with > 0.5% CO_2 present	(b) XLT-11-24 with > 0.5% CO_2 present
Temperature controlled heater system		
Sample conditioning systems - contact factory		

Analytical Industries Inc.

12. Quality Control & Calibration Certification

Date:	Customer:	Order No:	PASS BY
Model:	GPR-18 MS Explosion Proof PPB Oxygen Analyzer	**S/N**	
Sensor:	GPR-12-2000 MS PPB Oxygen Sensor	**S/N**	
Configuration:	A-1106-C PCB Assembly Main / Display A-1107-MS2 PCB Assembly Power / Interconnection A-1004-4-3-14 Sensor Housing A-4753 Sample Panel (A-4565 Flowmeter Assy, Bypass Valve)		
Model:	GPR-18 Explosion Proof PPM Oxygen Analyzer	**S/N**	
Sensor:	( ) GPR-12-333 PPM Oxygen Sensor		
	( ) XLT-12-333 PPM Oxygen Sensor	**S/N**	
Configuration:	A-1106-C PCB Assembly Main / Display A-1107-M PCB Assembly Power / Interconnection A-1004-4-3-5 Sensor Housing A-4753 Sample Panel (A-4565 Flowmeter Assy, Bypass Valve)		
Model:	GPR-28 Explosion Proof % Oxygen Analyzer	**S/N**	
Sensor:	( ) GPR-11-32 Oxygen Sensor		
	( ) XLT-11-24 Oxygen Sensor	**S/N**	
Configuration:	A-1106-C PCB Assembly Main / Display A-1107-C PCB Assembly Power / Interconnection A-1004-4-3-5 Sensor Housing A-4565 Flowmeter Assy		
Certification:	( ) ATEX Ex II 2 G Ex db IIB or IIB+H_2 T6 or T5 Gb		
Accessories :	Owner's Manual		
Other:	Wetted parts: 300 series stainless steel		
	FITN-1262 Flame Arrestor ½" NPT		
	ENCL-1146 Breather Device ½" NPT		
Power:	Standard power: ( ) 100/110 VAC or ( ) 220/240 VAC		
	Heater system: ( ) 100/110 VAC or ( ) 220/240 VAC; controller set at 85° F		
Test:	Electronics: LED indicators: range, alarms		
	4-20mA offset		
	Alarm relays activate/deactivate with changes in O_2 concentration		
	Analog signal output 0-1V and 4-20mA		
	Range ID contacts		
	Baseline drift on zero gas < ± 2% F.S. over 24 hour period		
	Gas: Noise level < ± 1.0% FS		
	Span adjustment within 10-50% FS		
	Peak to peak over / under shoot < 0.5% FS		
	Overall inspection for physical defects		
	Final: Close flow control valve and close shut off valve for shipment (18MS / 18 only)		
	Inspect overall and check accessories		
Options:			
Delivery:			

Appendix A

Regulations regarding equipment certified for use in hazardous areas require electrical connections be protected by conduit and/or cable gland entry. Analytical Industries Inc. recognizes the need of safe operation of this analyzer and **strongly recommends** the user to adhere to all local safety related directives during installation and operation.

The accessories used for cable gland entry, size 3/4"-14 NPT-M, must be covered by a separate certificate in accordance with the standards:

EN 60079-0=2014; IEC 60079-14=2013
EN 60079-1=2014; IEC 60079-17=2013

And they must be suitable to be used with the enclosure and the type of hazardous location:

Ex II 2 G

Ex db IIB or IIB+H_2 T6 Gb

Electrical connections require approved explosion proof sealing fittings and packing around wires and cables coming into or going out of the enclosure. Conduit seals and fittings must be certified "Ex d" components per EN60079-1 whose design and installation comply with ATEX standards for hazardous locations

Sealing fittings must be installed within 18" of this enclosure for IIB + H_2 locations.

All unused openings must be closed with a Killark CUP, CUPX, PLUG, GO-8177 series close=up plug or an Ex d certified close-up plug or sealing plug.

Explosion Proof Packing Fiber (non-asbestos)

For use as packing at the hub of sealing fittings. Use only ATEX approved packing fiber.

These instructions are supplied in good faith from information which we believe to be reliable. However, since users and not Analytical Industries Inc. control the application, installation and operation of our products, users therefore assume all associated risk and liability.

Contact and/or exposure may cause skin, lung or eye irritation. Use gloves and long sleeve coveralls to protect skin. Use a mask or respirator to prevent inhalation or eye contact during application.

Directions:

1. To prevent leakage of the liquid cement, tamp packing fiber between and around conductors where they enter fitting
2. Ensure conductors DO NOT contact each other or the fitting wall.
3. Leave enough space inside the fitting - space/ length equivalent to the inside diameter of the conduit but not less than 5/8".

Explosion Proof Sealing Cement

Directions:

1. After tamping packing fiber between and around conductors, prepare the sealing resin.
2. Use only ATEX approved sealant.
3. Prepare the sealant by mixing the resin catalyzing agent as recommended by the manufacturer.
4. Apply the resin as recommended by the manufacturer.

The following sealant for sealing fittings is ATEX approved.

ELFIT RESIN (Part A) CRV420
ELFIT CATHALIZING AGENT (Part B) CRV420H72

5. Mixture ratio: 100 grams Part A to 25 grams Part B
6. Blend mixture to obtain a homogeneous compound.
7. Immediately fill the sealing connection.
8. Cure 72 hours for the mixture to setup.

Consult manufacturer instructions for complete details related to mixing two components and pouring the resulting resin in the sealing fittings.

Engage at least five threads on all fill plugs.

Appendix B

EU Declaration of Conformity

Analytical Industries Inc. declares the products below comply with EN ISO/IEC 17050-1: 2010 and the relevant provisions of the directive, quality and individual product standards specified. All supporting documents are retained on the premises of the manufacturer and the notified body.

Directive:	2014/34/EU: Equipment and protective systems intended for use in potentially explosive atmospheres.				
Quality System	EN ISO/IEC 80079-34: 2011 Explosive atmospheres: Application of quality systems for equipment manufacture ISO 9001: 2015 Quality management systems – Requirements QA Notification: INERIS 07ATEX Q712				
Intended Use:	Measure oxygen or hydrogen sulfide concentration is a gas mixture in a potentially explosive atmosphere.				
Product:	GPR-18MS/18/28	GPR-1500/1800/2500/2800 AIS/D/IS/S	GPR-7500 AIS/IS	GPR-1000/1100/1200/ 1200P/1200MS/2000/2000P	GPR-7100/7100P
Description:	Oxygen Analyzer	Oxygen Analyzer	H2S Analyzer	Oxygen Analyzer	H2S Analyzer
Protection:	Flameproof enclosure and flame arrestors	1500/1500D/2500/2500S: Intrinsic safety PCB and barrier in safe area 1500/2500/1800/2800 AIS/IS: Flameproof enclosure and intrinsic safety PCB connected by sealing conduit	Flameproof enclosure and intrinsic safety PCB connected by sealing conduit	Intrinsic safety PCB	Intrinsic safety PCB
Power:	Max 240 VDC/VAC	1500/1500D/2500/2500S: Max 24 VDC 1500/2500/1800/2800 AIS/IS: Max 24 VDC/230 VAC	AIS: 12/28 VDC or 100/230 VAC IS: 12/28 VDC	6 V Lead acid rechargeable battery	6 V Lead-acid rechargeable battery
Category:	Ex II 2 G	Ex II 2 G	Ex II 2 G	Ex II 2 G	Ex II 2 G
Classification:	Ex db IIB or IIB+H2 T6 Gb T amb -20°C / +60°C	1500/1500D/2500/2500S: Ex ia IIB T4 Gb T amb -20°C +50°C 1500/2500/1800/2800 AIS/IS: Ex d [ib] ib IIB T4 Gb T amb -20°C +50°C	Ex d ib IIB T4 Gb T amb -20°C +50°C	Ex ib IIC T4 Gb T amb +5°C +45°C	Ex ib IIB T4 Gb T amb +5°C +45°C
Certificate:	INERIS 07ATEX0025X	INERIS 08ATEX0036	INERIS 12ATEX0044	INERIS 10ATEX0010	INERIS 13ATEX0007
Conformity ATEX:	EN IEC 60079-0: 2018 EN 60079-1: 2014	EN 60079-0: 2006 EN 60079-1: 2004 EN 60079-11: 2007	EN 60079-0: 2009 EN 60079-1: 2007 EN 60079-11: 2012	EN 60079-0: 2013 EN 60079-11: 2012	EN 60079-0: 2009 EN 60079-11: 2012

The harmonized standards EN 60079-0: 2018, EN 60079-1: 2014 and EN 60079-11: 2012 where relevant have been compared to the standards used for certification: EN 60079-0: 2006, EN 60079-1: 2004 and EN 60079-11: 2007 and no changes in the state of the art apply to the equipment.

Manufacturer: Analytical Industries Inc.
2855 Metropolitan Place
Pomona, California 91767 USA
Tel 909-392-6900

Notified Body: INERIS (0080)
PARC Technologique Alata - BP 2
60550 Verneuil-en-Halatte
France

The undersigned confirm this 11th day of December, 2019 that procedures have been implemented in accordance with the standards identified herein, the products supplied are manufactured strictly within the terms of the certifications and the quality has been verified to the acceptance standards.

Patrick J. Prindible, Vice President

Rev 12/19